TM 9-4931-703-14-1

TECHNICAL MANUAL

OPERATOR'S, ORGANIZATIONAL, DIRECT SUPPORT,

AND GENERAL SUPPORT MAINTENANCE MANUAL:

VLF/LF TRACKING RECEIVER, TRACOR MODEL 599J

This is a REPRINT including Changes 1 and 2.

HEADQUARTERS, DEPARTMENT OF THE ARMY

AUGUST 1972

TECHNICAL MANUAL)
)
NO. 9-4931-703-14-1)

HEADQUARTERS
DEPARTMENT OF THE ARMY
Washington, D. C., 8 August 1972

Operator's, Organizational, Direct Support, and General Support Maintenance Manual, Including Repair Parts and Special Tools List: VLF/LF TRACKING RECEIVER, TRACOR MODEL 599J

			Page
I	INTRODUCTION		
	0-1	General	0-1
	1-1	Purpose	1-1
	1-4	Description	1-4
II	SPECIFICATIONS		
	2-1	General	2-1
	2-2	Frequency Coverage	2-1
	2-3	Frequency Standard Input	2-1
	2-4	Antenna Requirements	2-1
	2-5	LO Synthesizer	2-2
	2-6	Time Difference Register	2-2
	2-7	Recording Outputs	2-3
	2-8	Meter Display	2-4
	2-9	Audio Output	2-4
	2-10	Auxiliary Outputs	2-4
	2-11	Ambient Temperature Limits	2-5
	2-12	Performance	2-5
	2-13	Receiver Sensitivity	2-5
	2-14	Signal/Noise Performance	2-5
	2-15	Bandwidth	2-6
	2-16	Noise Suppression	2-6
	2-17	Synthesizer Stability	2-7
	2-18	Dynamic Range	2-7
	2-19	Automatic Gain Control	2-8
	2-20	Phase-tracking Servo	2-8
	2-21	Calibration Accuracy	2-9
	2-22	Mechanical and Power	2-9
	2-23	Power Requirements	2-9
	2-24	Packaging	2-10
	2-25	Dimensions	2-10
	2-26	Weight	2-10
	2-27	Options	2-10

Section			Page
	2-28	Built-in Recorder	2-10
	2-29	Audio Amplifier	2-11
	2-30	OMEGA Option	2-11
III	APPLICATIONS		
	3-1	Introduction	3-1
	3-3	Frequency Measurement, Calibration and Standardization	3-1
	3-20	Timing and Synchronized Clock Systems	3-13
	3-25	Investigation of VLF Propagation Phenomena	3-13
IV	INSTALLATION AND OPERATION		
	4-1	Installation	4-1
	4-3	Initial Inspection	4-1
	4-5	Module Installation	4-1
	4-7	Power Connections	4-1
	4-10	Antenna	4-2
	4-12	Frequency Standard	4-2
	4-14	Operation	4-3
	4-16	Initial Adjustment of Controls	4-3
	4-21	Subsequent Adjustment of Controls	4-4
V	PRINCIPLES OF OPERATION		
	5-1	System Description	5-1
	5-2	Basic System Operation	5-1
	5-5	Detailed System Operation	5-1
	5-21	IF Amplifiers	5-11
	5-37	Theory of Operation	5-15
	5-38	Receiver (Model 599-204)	5-15
	5-90	AGC-Phase (Model 599-303)	5-28
	5-99	Phase Servo (Model 599-402)	5-31
	5-125	Power Supply (Model 599-502)	5-42

Section Page

VI MAINTENANCE

6-1 Introduction....6-1
6-3 Recommended Test Equipment....6-1
6-5 Adjustment Procedures....6-2
6-7 Power Supply Regulated DC Voltage Level....6-4
6-9 Phase Error DC Amplifier....6-5
6-11 AGC DC Amplifier....6-5
6-13 Delay Generator Adjustment....6-5
6-15 1.0 MHz Crystal Filter....6-6
6-17 Frequency Divider....6-7
6-19 Tracking Threshold Adjustment....6-7
6-21 Phase Detector/VCO Bias Adjustment....6-8
6-23 VCO Natural Frequency Adjustment....6-9
6-25 Adjustment for Minimum Phase Modulation....6-9
6-27 Adjustment for RF Phase Splitter Balance....6-10
6-29 Adjustment for Third Harmonic Balance....6-11
6-31 Image Rejection Adjustment....6-11
6-33 RF Preamp Gain Adjustment....6-12
6-35 Audio Remodulator Frequency Adjustment....6-12
6-37 Troubleshooting....6-13
6-40 Waveforms....6-16

VII REPLACEABLE PARTS

7-1 Introduction....7-1
7-3 Item/Reference Designation Index....7-1
7-6 List of Replaceable Parts....7-2
7-8 Code List of Manufacturers....7-2
7-10 Ordering Information....7-2
7-13 Indexes....7-3

Section		Page
VIII	SCHEMATIC DIAGRAMS AND ASSEMBLY DRAWINGS	
	8-1 Introduction	8-1
	8-6 Options	8-1
	8-8 Schematic Diagrams and Assembly Drawings	8-2
IX	PREVENTIVE MAINTENANCE INSTRUCTIONS	9-1
X	(Deleted)	10-1
Appendix		Page
A	AUDIO AMPLIFIER OPTION	
	A-1 Introduction	A-1
	A-4 Installation and Operation	A-1
	A-7 Theory of Operation	A-3
	A-9 Adjustment Procedure	A-3
	A-11 Replaceable Parts	A-3
	A-13 Schematic Diagram and Assembly Drawings	A-7
B	RECORDER OPTION	
	B-1 Introduction	B-1
	B-3 Adjustment Procedures	B-1
	B-5 Circuit Connections	B-2
	B-7 Replaceable Parts	B-2
C	OMEGA OPTION	
	C-1 Introduction	C-1
	C-5 Specifications	C-1
	C-7 Theory of Operation	C-2
	C-12 Adjustment on Test Procedures	C-2
	C-14 Replaceable Parts	C-6
	C-16 Schematic Diagram and Assembly Drawings	C-9
D	REFERENCES	D-1
E	BASIC ISSUE ITEMS LIST AND ITEMS TROOP INSTALLED OR AUTHORIZED LIST	E-1
F	MAINTENANCE ALLOCATION CHART	F-1

LIST OF ILLUSTRATIONS

Figure	Title	Page
1-1	VLF/LF Tracking Receiver Model 599J	1-2
1-2	VLF/LF Tracking Receiver, Rear View	1-2
3-1	Accumulated Time Error, Microseconds	3-3
3-2	Typical Phase Tracking Record	3-6
3-3	Phase Track Readings: Sulzer 2.5 MHz Oscillator Relative to WWVL as Received in Austin, Texas	3-8
3-4	Frequency Drift (Ageing) Characteristic of Sulzer Oscillator	3-9
5-1	Simplified Diagram of Phase Tracking System Operation	5-2
5-2	Block Diagram of Basic Method of Image Rejection by Outphasing	5-4
5-3	Block Diagram of Basic Modulation Type Attenuation System and Associated Waveforms	5-6
5-4	Detailed Functional Block Diagram of Dual (I and Q) Step-Wave Modulator and Sequencer Waveforms	5-7
5-5	Basic Functional Block Diagram of the Model 599J Tracking Receiver	5-9
5-6	Basic Block Diagram of VCO-Preset Counter (Synchronous Divider Synthesizer)	5-13
5-7	AGC-Phase Error Amplifier, Series 599-303	5-29
5-8	Block Diagram of Phase Servo, Model 599-402	5-32
5-9	Block Diagram of Power Supply, Series 599-502	5-43
6-1	Test Set 1	6-3
6-2A	Assembly 599735 Waveforms	6-19
6-2B	Assembly 599737 Waveforms	6-22
6-2C	Assembly 599736 Waveforms	6-25
6-2D	Assembly 599746 Waveforms	6-27
6-2E	Assembly 599747 Waveforms	6-30
6-2F	Assembly 599800 Waveforms	6-34
6-2G	Assembly 599569 Waveforms	6-36
6-2H	Assembly 599570 Waveforms	6-38
6-2J	Assembly 599761 Waveforms	6-41

LIST OF ILLUSTRATIONS (Continued)

Figure	Title	Page
A-1	Basic Block Diagram of Audio Amplifier Circuit	A-2
C-1	Block Diagram of AGC Clamping Function	C-3

LIST OF TABLES

Table	Title	Page
1-1	VLF/LF Stations and Frequencies	1-2
3-1	Useful Conversion Factors	3-2
6-1	Recommended Test Equipment	6-1
6-2	Troubleshooting Chart	6-14
6-3A	Assembly 599735 Waveforms	6-18
6-3B	Assembly 599737 Waveforms	6-20
6-3C	Assembly 599736 Waveforms	6-24
6-3D	Assembly 599746 Waveforms	6-26
6-3E	Assembly 599747 Waveforms	6-28
6-3F	Assembly 599800 Waveforms	6-33
6-3G	Assembly 599569 Waveforms	6-35
6-3H	Assembly 599570 Waveforms	6-37
6-3J	Assembly 599761 Waveforms	6-40

0-1 General

0-2 Scope

This manual includes installation and operation instructions and covers organizational, direct support (DS), and general support (GS) maintenance. It describes the VLF-LF Tracking Receiver, Tracor Model 599J.

0-3 Indexes of Publications

DA Pam 310-4. Refer to the latest issue of DA Pam 310-4 to determine if there are any new editions, changes, or additional publications pertaining to the equipment.

DA Pam 310-7. Refer to DA Pam 310-7 to determine whether there are Modification Work Orders (MWO's) pertaining to the equipment.

0-4 Forms and Records

Reports of Maintenance and Unsatisfactory Equipment. Use equipment forms and records in accordance with instructions given in TM 38-750.

Report of Packaging and Handling Deficiencies. Fill out and forward DD Form 6 as prescribed in AR 700-58 (Army), NAVSUP Pub 378 (Navy), AFR 71-4 (Air Force), and MCO P4030.29 (Marine Corps).

Discrepancy in Shipment Report. Fill out and forward Discrepancy in Shipment Report (DIS-REP) (SF 361) as prescribed in AR 55-38 (Army), NAVSUP Pub 459 (Navy), AFM 75-34 (Air Force), and MCO P4610.19 (Marine Corps).

Reporting of Errors. The reporting of errors, omissions, and recommendations for improving this publication by the individual user is encouraged. Reports should be submitted on DA Form 2028 (Recommended Changes to Publications) and forwarded direct to Commanding General, U. S. Army Missile Command, AMSMI-MFM, Redstone Arsenal, AL 35809.

SECTION I
INTRODUCTION

1-1 PURPOSE

1-2 The all solid-state TRACOR Model 599J Tracking Receiver has been expressly developed to utilize the highly stabilized carrier frequency signals of VLF/LF stations for time and frequency calibration, measurement, and standardization purposes. Phase-locked reception of these VLF signals gives long-term and short-term accuracy that is generally several orders of magnitude better than that obtainable by reception of WWV or WWVH. Frequency measurement to an accuracy of 1 part in 10^9 can be achieved in intervals as short as 30 minutes; observation over twenty-four hour intervals gives a measurement accuracy of several parts in 10^{11}.

1-3 VLF/LF stations which transmit on the basis of controlled carrier frequencies* are listed in Table 1-1. The Model 599J receiver provides reliable tracking on any of these stations at receiving locations nearly anywhere in the world. (For reception of the OMEGA transmissions, an auxiliary switch programmer is

---

* All frequency standard transmissions are based on the UT2 time scale, the universal time scale in civil use throughout the world. The U. S. Navy frequency assignments are subject to change without notice. Frequencies listed here are those in use as of November, 1966.

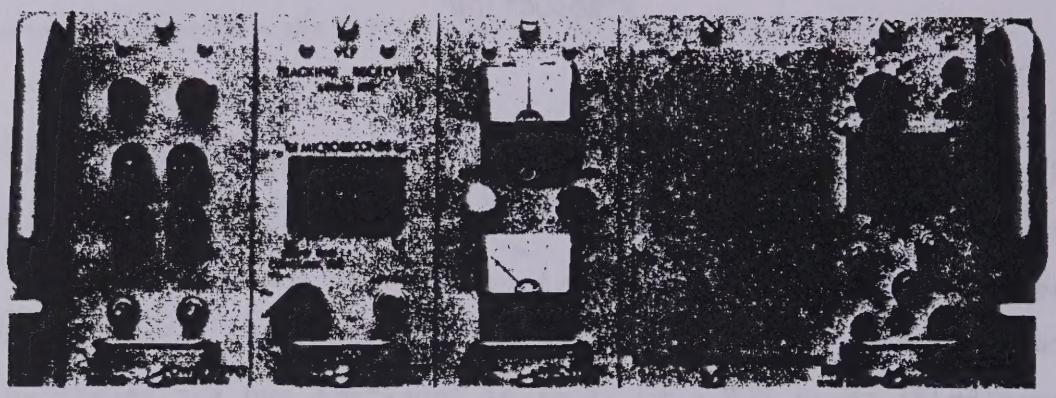

Figure 1-1. VLF/LF Tracking Receiver Model 599J.

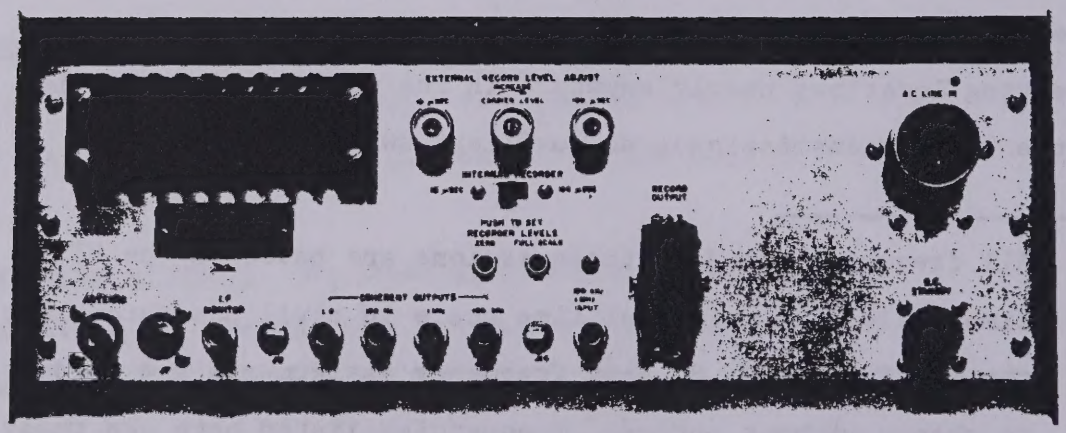

Figure 1-2. VLF/LF Tracking Receiver, Rear View.

TABLE 1-1 VLF/LF STATIONS AND FREQUENCIES

STATION	FREQUENCY, kHz	LOCATION	SPONSOR
NWC	15.5	Northwest Cape, Australia	U. S. Navy
GBR	16.0	Rugby, England	British Post Office
NDT*	17.4		U. S. Navy
NAA	17.8	Cutler, Maine	U. S. Navy
NPG	18.6	Jim Creek, Washington	U. S. Navy
GQD*	19.0		British Post Office
GBZ	19.6	Criggion, Wales	British Post Office
WWVL	20.0	Ft. Collins, Colorado	Nat'l Bu. Stds.
NSS	21.4	Annapolis, Maryland	U. S. Navy
NBA	24.0	Balboa, Canal Zone	U. S. Navy
NPM	26.1	Lualualei, Hawaii	U. S. Navy
NPN		Guam, Mariana Is.	U. S. Navy
JG2AS*	40.0	Kemigawa, Japan	
OMA	50.0	Podebzady, Czech.	
WWVB	60.0	Ft. Collins, Colorado	Nat'l Bu. Stds.
MSF	60.0	Rugby, England	
HBG	75.0	Prangins, Switzerland	
DCF-77	77.5	Mainflingen, Federal Republic of Germany	
CYZ-40	80.0	Ottawa, Canada	
FTA-91	91.15	St. Andre-de-Corcy, France	

* Carrier frequency may not be highly stabilized.

required for selection of a particular OMEGA station from the network of stations. (The TRACOR Model 533 OMEGA Gating Unit is available for this purpose.) A thumbwheel digital switch, reading station frequency directly in kHz, provides quick tuning to any desired VLF station. A total of 1939 discrete channels, in 50 Hz steps, is available between the lower limit of tracking operation at 3.00 kHz and the upper limit of 99.95 kHz. (Note that frequency coverage deliberately eliminates 100 kHz. Loran C transmissions on this frequency are phase-coded so that normal phase tracking techniques do not apply.)

1-4 DESCRIPTION

1-5 The Model 599J is a fully integrated phase-locked receiving system for frequency standardization purposes. The system incorporates various major functional elements - VLF/LF receiver/frequency synthesizer, phase comparator, electronic phase shifting servo, and power supply - into a single instrumentation package. Only an antenna and external frequency standard must be connected to the unit.

1-6 Relative time difference in microseconds between the phase of the VLF/LF stabilized-carrier frequency and the phase derived from the local frequency standard is continuously displayed on a front panel digital counter. Phase changes as small as 0.1 microsecond may be read on this counter. Outputs to an external chart recorder are also provided so that a permanent record of the

accumulated phase difference can be made. A built-in strip-chart recorder is optional.

1-7 Incorporated in the Model 599J are many advanced features which assure a superior performance capability under diverse field conditions in a variety of application areas. Among these features are electronic signal rejection techniques which eliminate the need for RF filters, and a new AGC technique which assures full-reliability phase tracking over a 40 db range of carrier level.

1-8 Among other features available for meeting specific requirements are means for improved antenna directivity, Doppler compensation, provision for auxiliary data recording and remote switching, and modification of the servo response characteristics.

SECTION II
SPECIFICATIONS

2-1 GENERAL

2-2 Frequency Coverage	Stabilized-carrier tracking over the range from 5.00 kHz to 99.95 kHz, in 50 Hz increments. Thumb-wheel switch selects tens, units, and tenths of kHz; toggle switch adds +0 Hz or +50 Hz to thumb-wheel switch setting, as desired. Receiver is usuable down to 3.00 kHz.
2-3 Frequency Standard Input	Accepts stable 100 kHz or 1 MHz signal from external frequency standard; single BNC connector input on rear chassis; recommended input level 0.5 to 5.0 volts rms into 1000 ohms.
2-4 Antenna Requirements	Designed for use with loop, whip, or simple wire antenna; shielded loop antenna (TRACOR Model 599-603D or equal) recommended for high noise locations. Nominal antenna

input impedance: 50 ohms. Antenna may be located any distance from receiver. 100 feet of 50 ohm coaxial cable (RG-58/U with BNC connectors) supplied with receiver.

2-5 LO Synthesizer

Appropriate LO frequency, phase normalized, is generated by a coherent synthesizer system. Main tuning is accomplished by thumbwheel switches that control and indicate frequency of reception in tens, units, and tenths of kHz; a toggle switch allows adding +50 Hz to the thumbwheel switch setting. Choice of LO 1 kHz above or below signal frequency is accomplished by means of a second toggle switch.

2-6 Time Difference Register

Front panel digital counter pulsed by electronic phase servo, displays relative time difference between local standard and VLF/LF carrier; counter dial cumulative to 9999.9 μseconds. Counter dial may be

manually set to zero or other desired initial reading (independently of phase position of tracking servo.)

2-7 Recording Outputs

Outputs are available on the rear panel for recording phase and coherent carrier amplitude information.

Phase output is a voltage proportional to relative phase difference between the local standard and the VLF/LF carrier. Two of these outputs are available simultaneously to allow recording on a 1 ma recorder with 10 and 100 μsecond full scale deflection. Pushbutton switches facilitate full-scale and zero adjustments for the recorder.

The coherent carrier amplitude output is derived from the receivers's AGC voltage and has an approximately logarithmic characteristic over a 40 db range.

Carrier information may be recorded on any 1 ma recorder.

2-8 Meter Display

Individual front-panel meters indicate:

(a) relative carrier level: 40 db full scale range

(b) Phase detector error voltage (on zero-center meter)

2-9 Audio Output

Earphone audio output is standard; internal loudspeaker is optional. Closed circuit earphone jack mutes loudspeaker when earphones are connected. Earphone monitors amplified 1 kHz IF signal derived from IF, with 3 db S/N improvement over signal from IF amplifier.

2-10 Auxiliary Outputs

The following outputs are furnished at rear-panel BNC connectors:

(a) Amplified VLF/LF signal at 1 kHz IF: 5 mv, nominal

(b) Phase-shifted 100 kHz square wave: 1.75 v p-p, nominal

(c) Phase-shifted 1 kHz square wave: 0.5 v p-p, nominal

(d) Phase-shifted 100 Hz square wave: 0.5 v p-p, nominal

(e) Reference frequency (LO), offset 1 kHz from VLF/LF carrier, nominal 0.75 v p-p square wave.

2-11	Ambient Temperature Limits	0° C to $+50^{\circ}$ C while operating ($+65^{\circ}$ C maximum storage temperature)
2-12	PERFORMANCE	
2-13	Receiver Sensitivity	0.01 μvolt signal (corresponding to 2.0 μvolt/meter field strength at 20.0 kHz with Model 599-603D loop antenna) from 5 to 30 kHz and 0.02 μvolt signal from 30 to 99.95 kHz into receiver energizes carrier relay and enables normal phase-tracking.
2-14	Signal/Noise Performance	Tracking maintained at an input signal/noise ratio of -50 db (Gaussian noise measured in a 1 kHz bandwidth).

2-15 Bandwidth

(a) Range of broadband, low-gain receiver front-end amplifier extends from below 3 kHz to approximately 100 kHz.

(b) IF bandwidth is 40 Hz, nominal between 3 db points. Six IF filter sections assure a high order of attenuation of signals in adjacent channels.

(c) Servo tracking bandwidth: (nominal at 20 kHz)
0.06 Hz on 5 sec time constant
0.02 Hz on 15 sec time constant
0.006 Hz on 50 sec time constant
0.002 Hz on 150 sec time constant

2-16 Noise Suppression

Blanking circuit rejects impulse noise, both man-made and atmospheric ("sferics"); front panel lamp indicates presence of blanked noise impulse and facilitates adjustment of blanking circuit control. External blanking input terminals provided to allow operation of blanking circuits for

gating of signals by TRACOR Model 533 series OMEGA Gating unit.

2-17 Synthesizer Stability

Phase of the local oscillator signal is absolutely fixed by synthesizer control circuits; average LO phase recovers to within 0.05 μsecond of its original value when synthesizer tuning is changed, and then restored to its original setting. Special techniques assure rapid tuning of the synthesizer. LO phase is stabilized at the new frequency within one second after a tuning change.

2-18 Dynamic Range

Total signal level operating range is 120 db, including 40 db AGC, and 80 db MGC. Range of acceptable signals: μ0.01 μvolt to 10 mv at the antenna input terminal. Interfering signals removed more than 200 Hz from the tuned frequency and no larger than 100 mv cannot cause RF or IF saturation.

2-19 Automatic Gain Control	Stable AGC circuit assures full-reliability phase-locked servo operation over a 40 db range of carrier level. Total variation of phase due to AGC alone is less than 0.3 μseconds.
2-20 Phase-tracking Servo	Versatile, all-electronic servo, using true mechanical analog servo principles rather than voltage-controlled oscillator, maintains phase-shifted reference signal in phase null condition relative to VLF carrier. (a) Tracking time constant: Front panel four-position switch allows selection of 5, 15, 50, and 150 seconds, nominal at 20 kHz. Tracking time constant is inversely proportional to frequency. (b) Maximum phase tracking rate: 1×10^{-6} for 5 sec time constant 3×10^{-7} for 15 sec time constant 1×10^{-7} for 50 sec time constant 3×10^{-8} for 150 sec time constant

(c) Servo deadband: Less than ±0.1 μsecond.

(d) Manual servo slewing: Front panel toggle switch is provided to advance or retard servo at a nominal 2 μsec/sec rate.

(e) Servo output jitter: Servo output voltages are smooth in phase during tracking; maximum servo output phase discontinuities are smaller than 10 nanoseconds equivalent.

2-21 Calibration Accuracy

Short- and long-term stability is better than ±0.25 μsec relative to received carrier under typical laboratory conditions. Calibration accuracy is better than $\pm 1 \times 10^{-11}$ when averaging for 24 hours.

2-22 MECHANICAL AND POWER

2-23 Power Requirements

Operates from 95-125 vac or 190 to 250 vac, 48-62 Hz, or from +12 and -12 vdc external standby

batteries. Batteries, when used, automatically assume full operating load in the event of primary ac power failure. All receiver functions, including servo tracking, are sustained without interruption; however, chart drive motor in optional recorder stops during ac power off time. Dc chart drive motor available on special order.

2-24 Packaging

Circuits are packaged in the following modules:

Model 204: Receiver/Synthesizer
Model 303: AGC/Phase Error
Model 402: Phase Servo
Model 502: Power Supply

2-25 Dimensions

19" rack panel, 7 inches high, 16½ overall depth behind panel

2-26 Weight

50 pounds, net

2-27 OPTIONS

2-28 Built-in Recorder

Inkless strip chart recorder is an integral part of Receiver/Synthesizer Module 599-204.

2-29 Audio Amplifier

Internal loudspeaker for monitoring audio derived from IF signal. Unique loudspeaker circuits achieve 3 db improvement over signal/noise existing in IF bandwidth. Loudspeaker muted when earphone plug is connected.

2-30 OMEGA Option

The OMEGA Option permits the Model 599J receiver and the TRACOR Model 533 OMEGA Gating Unit to operate together for tracking time-shared OMEGA long-range navigation system transmissions.

SECTION III

APPLICATIONS

3-1 INTRODUCTION

3-2 VLF tracking receivers have applications in the following technical areas:

a. Frequency measurement, calibration and standardization (of precision crystal oscillators, atomic frequency standards and other highly stable frequency sources)

b. Timing and synchronized clock systems

c. Investigation of VLF propagation phenomena

Each of these application areas are discussed briefly.

3-3 FREQUENCY MEASUREMENT, CALIBRATION AND STANDARDIZATION

3-4 Use of the receiver for frequency calibration of any frequency standard with an available 100 kHz or 1 MHz output is simple and straightforward. Any relative frequency error between the local frequency standard and the received VLF carrier signal is observable as a phase drift on the MICROSECONDS digital counter or on a recorder chart. The rate of this phase drift can be directly interpreted as a fractional frequency error in the local standard; thus, a phase drift rate of one microsecond in a 100 second time interval represents a fractional frequency diviation of one part in 10^8.

3-5 Table 3-1 presents several useful conversion factors. The

fractional frequency error for observed phase changes over various elapsed time intervals can also be obtained from the graphs shown in Figure 3-1.

TABLE 3-1 USEFUL CONVERSION FACTORS

1 min = 60 sec = 6×10^{7} μsec
1 hr = 3600 sec = 3.6×10^{9} μsec
1 day = 8.64×10^{4} sec = 8.64×10^{10} μsec
1 μsec/min = 1.667×10^{-8}
1 μsec/hr = 2.78×10^{-10}
1 μsec/day = 1.16×10^{-11}
Fractional frequency error, $\frac{\Delta f}{f} = \frac{\text{difference in } \mu\text{seconds}}{\text{elapsed time in seconds}} \times 10^{-6}$

3-6 Suppose that the front panel MICROSECONDS counter reading is 5240.1 at 9:00 a.m. and 5278.4 at 1:30 p.m. of the same day. The elapsed time is thus four hours and 30 minutes, or 16,200 seconds. The net phase difference is 5278.4 minus 5240.1, or +38.3 microseconds. The fractional frequency difference, then, is

$$\Delta f/f = \frac{+38.3}{16,200} \times 10^{-6} = +2.36 \times 10^{-9}$$

3-7 The "+" sign in the frequency diviation, corresponding to an increase in the MICROSECONDS counter reading with time, implies that the local frequency standard is high in nominal frequency.

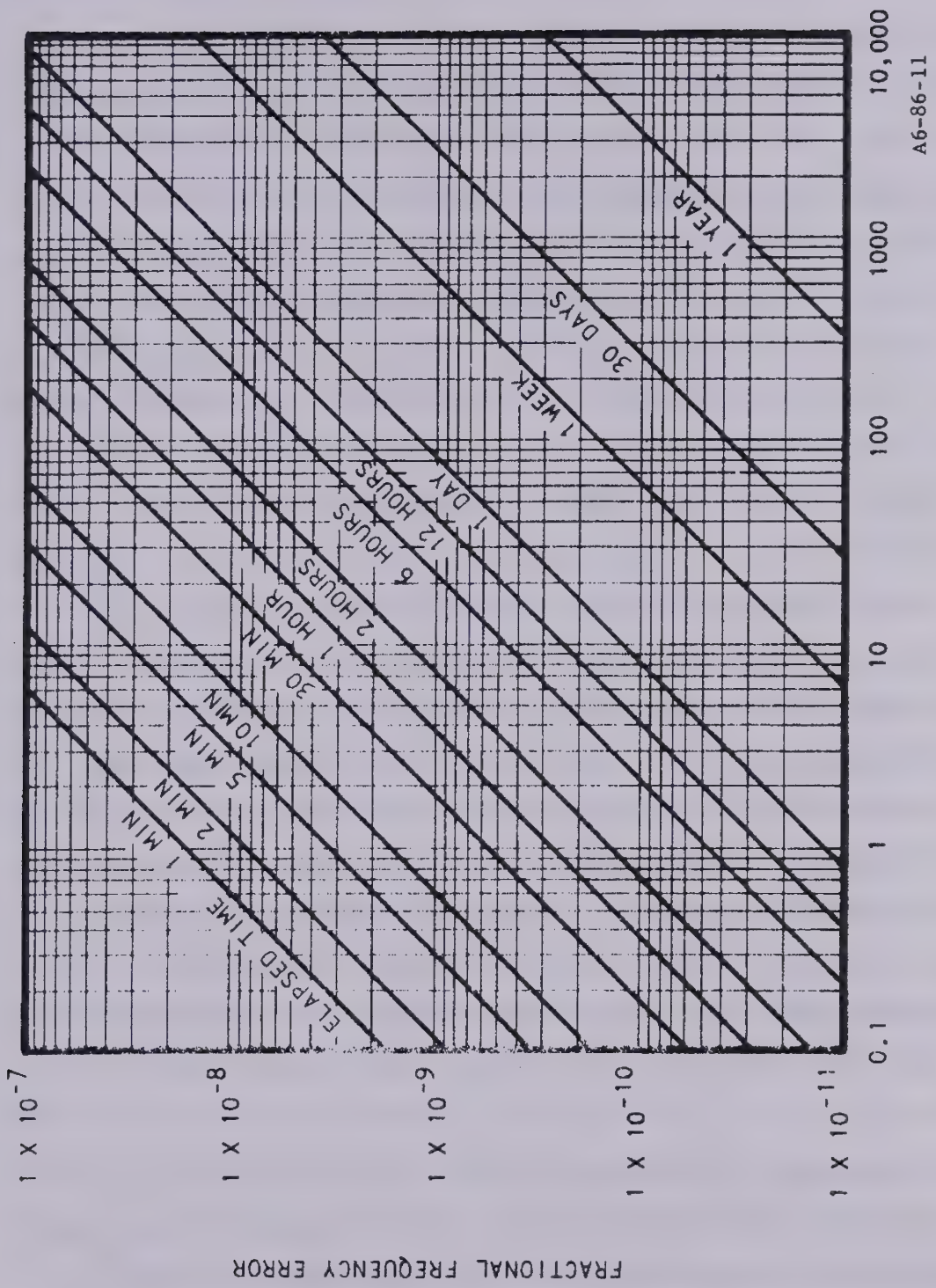

Figure 3-1. Accumulated Time Error, Microseconds

3-8 A similar calculation can be made using the microseconds difference information taken from a chart recorder, taking into account the fact that each full scale deflection of the chart trace represents an additional 10 or 100 microseconds (depending on whether the 10 or the 100 microseconds full scale output is used) phase change, either positive or negative as the case may be. The phase resolution of the receiver, as read on the MICROSECONDS counter, is typically ± 0.1 microseconds; accordingly, frequency comparisons to an accuracy of parts in 10^9 (relative to the received VLF carrier) can be obtained within an interval of 10 to 30 minutes.

3-9 The VLF region is characterized by extremely stable propagation, particularly during all-daylight path conditions. Rather large phase changes can occur during the sunrise and sunset transition intervals and, to a lesser extent, during nighttime. The diurnal shift from daytime to nighttime reception is in the or order of 15 to 50 microseconds for most locations at moderate ranges from the VLF stations. The phase propagational pattern is quite repeatable and predictable on a day-to-day basis; measurements made during all-daylight propagation path conditions typically indicate an intrinsic accuracy of ± 1 microsecond, or better.

3-10 Accordingly, for greatest possible accuracy observations should be made at 24 hour intervals, in the vicinity of local noon or during an all daylight path for the selected VLF station. It

is highly desireable that a continual log be maintained, either by recording the readings on the MICROSECONDS digital dial or the chart records on a daily basis.

3-11 In reading chart records of the accumulated phase error it should be recognized that the recorder displays an incremental range of 10 or 100 microseconds, depending on whether the 10 or the 100 microsecond output is used. The total net change in phase over an elapsed time interval can be obtained, however, by keeping track of the full excursions of the recorder, each full excursion representing a net phase change of ±10 or ±100 microseconds. The procedure to be followed can be understood by reference to Figure 3-2. Here is shown a "typical" phase tracking record (the heavy solid trace) over an interval of several days. The full scale range in this case is 100 microseconds. During the first day the local standard was high in frequency, as evidenced by the post-dawn chart scale reading of approximately 40 microseconds and the late afternoon reading of approximately 80 microseconds. At 6:00 p.m. the recorder pen reached the upper limit of the chart record and immediately swung back to the opposite side of the record. The discontinuity in the record occurs at the "fly-back" point of the phase comparator. It is obvious that the real phase behavior of the local standard, if the recorder pen could have continued its motion beyond the edge of the chart paper, would have been that shown as a dotted trace in the upper portion of Figure 3-2. Thus, if we assume that the phase reading was approximately

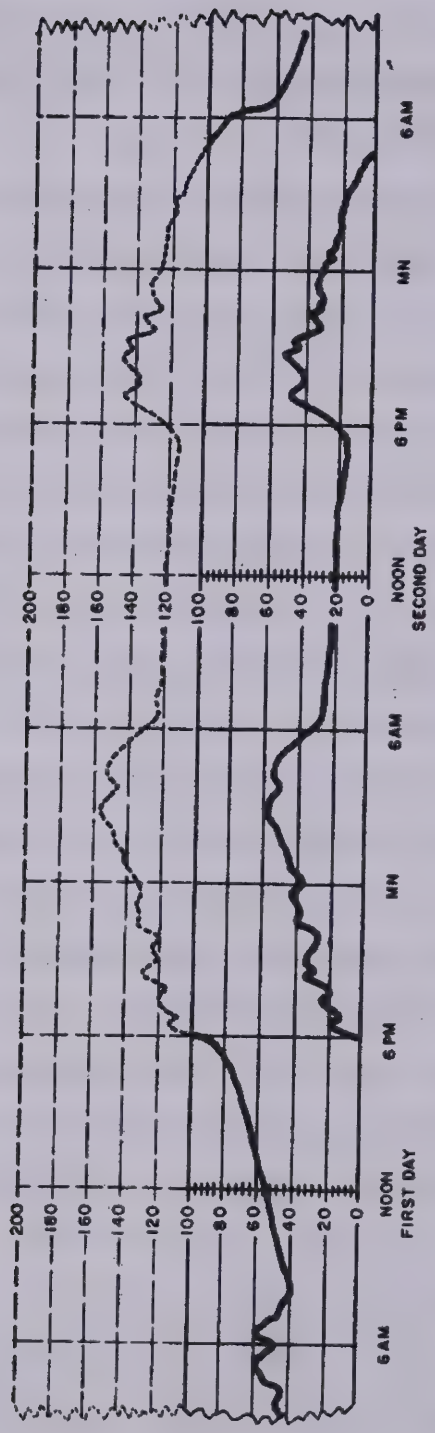

A400-466

Figure 3-2. Typical Phase Tracking Record

"50 microseconds" at noon of the first day, the proper phase reading at noon on the second day is obviously "120 microseconds" rather than simply "20 microseconds."

3-12 Figure 3-3 illustrates the type of frequency calibration record which can be obtained on a routine basis. The data shown here were obtained with a high quality 2.5 MHz crystal oscillator shortly after it had been placed in operation. On November 21 the noon reading of the MICROSECONDS counter was 0317.2; on November 22 the noon reading was 0342.6 microseconds, indicating that the oscillator was high in the average frequency by an amount which resulted in a phase advance of 25.4 microseconds over the 24-hour interval.

3-13 Frequency drift characteristics of the oscillator can best be visualized by converting the basic data as shown in Figure 3-3 to a daily "frequency error" plot as shown in Figure 3-4. In this plot it is seen that the frequency standard was high in frequency by approximately $+3 \times 10^{-10}$ at the start of the test (as derived from the observed +25.4 microsecond change during the first 24-hour period); furthermore, the plot shows that the oscillator shifted steadily toward lower frequency values. Thus, by December 2 the oscillator no longer showed a positive frequency error; at that time the MICROSECONDS counter was nearly stationary, indicating almost perfect synchronism with the received WWVL carrier frequency. During subsequent days the oscillator moved progressively lower in frequency; by December 11, twenty days after

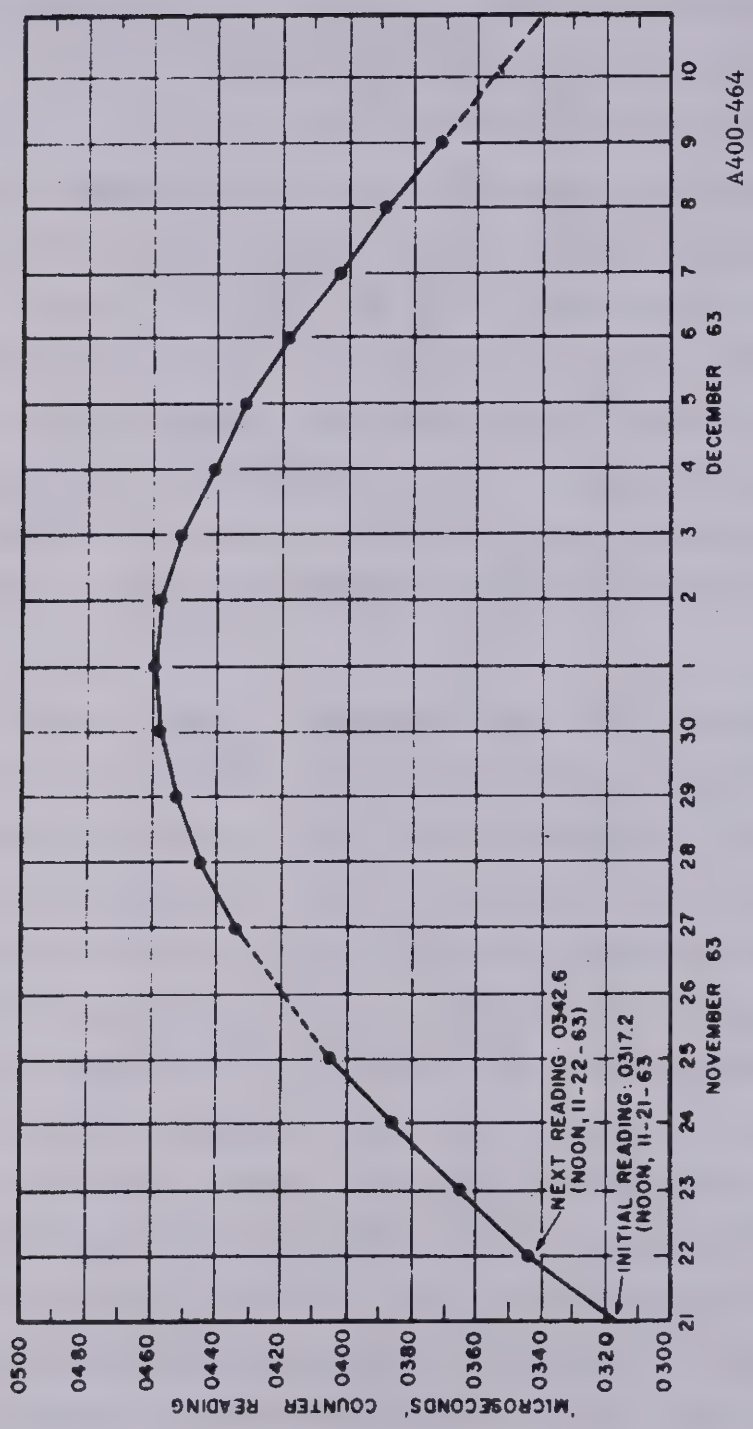

Figure 3-3. Phase Track Readings: Sulzer 2.5 MHz Oscillator Relative to WWVL as Received in Austin, Texas

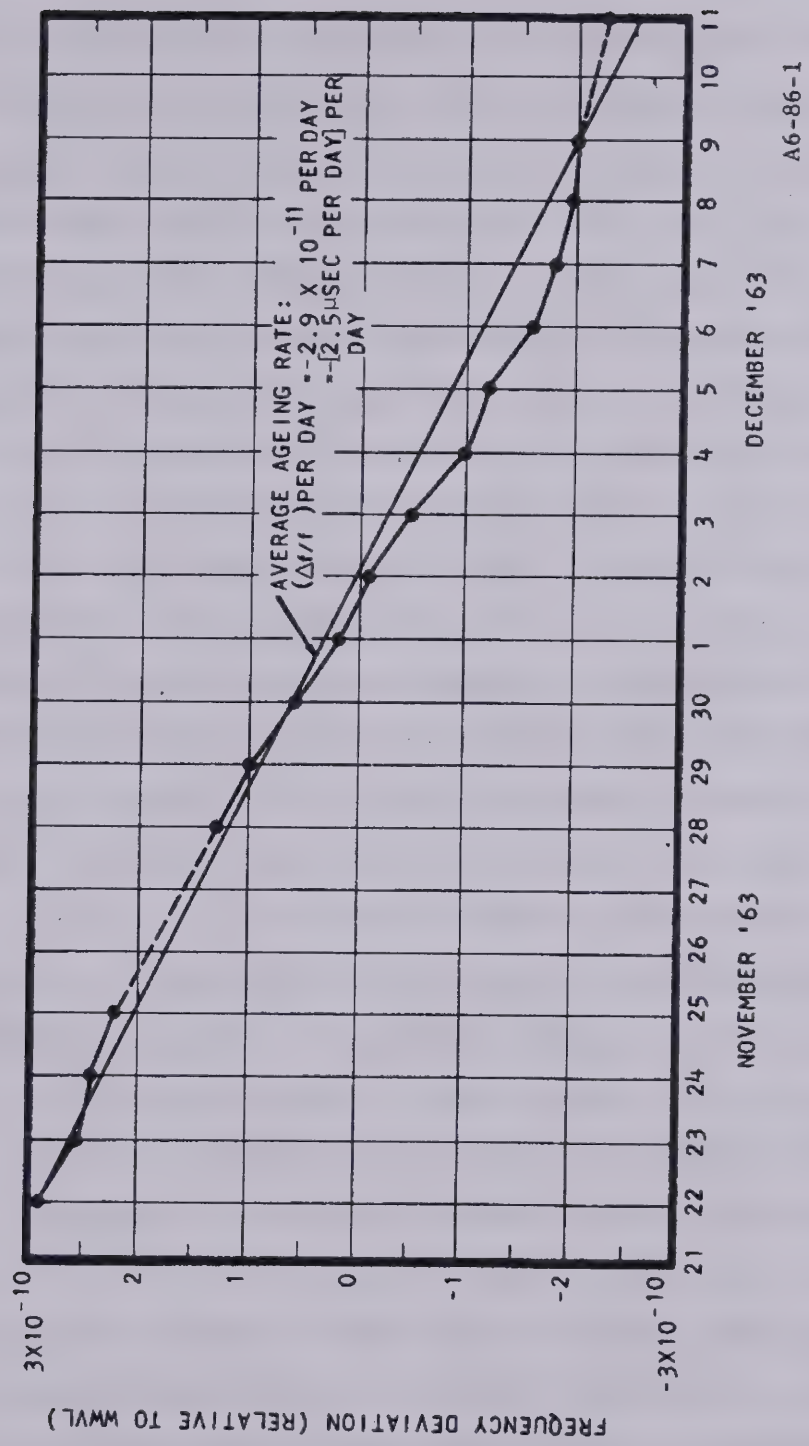

A6-86-1

Figure 3-4. Frequency Drift (Ageing) Characteristics of Sulzer Oscillator

the start of the recording, of approximately -2.5×10^{-10}.

3-14 The fact that the VLF stations sometimes stop transmitting need not interfere with the frequency calibration capability. Thus, during the time of the record discussed above, WWVL had two scheduled maintenance periods (on November 26 and December 12) when the station was off the air for 12 hours each time. During these long intervals the phase servo was automatically disabled; however, as soon as the station resumed its transmissions, the servo system quickly pulled into its proper equilibrium position. (There is always danger, however, that one or more cycles of the RF carrier will be gained or lost during an extended "off" time, particularly if the frequency standard has a sufficiently large frequency offset so that the accumulated phase error can exceed 180° during that interval. Gererally, however, the gain or loss of one or more RF cycles can be easily recognized if a graph of the MICROSECONDS readings is properly maintained.)

3-15 Frequency control of any high stability oscillator can best be maintained if its frequency performance is continually monitored and recorded in this graphical form. Frequency adjustments should be performed only when the drift records indicate that the oscillator is no longer within a desired tolerance. The maximum interval between adjustments depends upon the quality of the oscillator (particularly with respect to its "ageing" characteristic, or the rate at which its frequency changes with time) and the desired frequency tolerance. Thus, for the case of the crystal oscillator

to which Figures 3-3 and 3-4 apply, it is evident that adjustments every 21 days would be adequate if it is desired to maintain the oscillator frequency to an accuracy of $\pm 3 \times 10^{-10}$ relative to WWVL; on the other hand, if an accuracy of $\pm 1 \times 10^{-10}$ is required at all times, it would then be necessary that adjustments be performed at least weekly. Most high quality oscillators incorporate a vernier frequency control, usually with dial divisions calibrated in parts in 10^{10} or even 10^{11}, so that precision frequency adjustments can be made simply and with confidence. In some applications it may be preferred that vernier adjustments be made on a scheduled daily basis, rather than weekly or at random intervals; in any case, the procedure is based upon the information contained within the day-by-day graphs of accumulated phase changes.

3-16 In most applications it will be desirable that the oscillator be slightly overcompensated, rather than set exactly on frequency, whenever an adjustment is made. Thus, if experience indicates that the oscillator tends to drift (age) toward a lower frequency, the oscillator should always be adjusted so that it starts off with a positive frequency error; this overcompensation technique results in the maximum time interval before another adjustment is required to maintain the oscillator within specified tolerances.

3-17 Selection of the VLF station to be used for frequency correlation purposes depends upon many factors. Those groups involved in global network operation will undoubtedly be instructed to

monitor a transmitter that can be reliably tracked at all receiving sites. A "primary" station and one or more "secondary" monitoring stations will be advisable so that no receiving site is wholly dependent upon a single transmitter.

3-18 There are strong reasons for using the National Bureau of Standards station WWVL for frequency correlation purposes, at least within the United States and the Western Hemisphere. First of all, its central location provides favorable all-daylight propagation during normal working hours for groups on both the East and West coasts of the United States. Furthermore, evidence indicates that WWVL possesses higher stability, on a long-term basis, than any other VLF transmitter so that WWVL offers an excellent reference source for determining oscillator stability. Most important of all, the WWVL transmissions are directly related to the U. S. Frequency Standard, the National standard of frequency and time unit for the United States. Frequency calibration records based on the signals from WWVL are thus "directly traceable to the National Bureau of Standards," a familiar quality assurance requirement in many Government contracts. For those groups requiring extreme calibration accuracy, the National Bureau of Standards publishes a bulletin listing the measured frequency deviation of the WWVL transmissions, on a daily averaging basis, from the U. S. Frequency Standard itself.

3-19 At extreme ranges from the VLF transmitters it may be possible to receive signals along both the short great-circle path and the

and the long great-circle path (from the opposite direction). Attenuation of VLF signals is somewhat lower over an over-water and an all-darkness path; consequently, if the longer path is essentially over water, there may be transitional intervals during each day when interference will be encountered. The interference, if substantial, will result in erratic phase tracking. The real danger is that one or more RF cycles will be gained or lost whenever the direction of the dominant signal reverses. The solution to this problem is either to use some other VLF station which shows no interference effect or, even better, to use a cardioid type of antenna pattern to provide directional discrimination against the unwanted azimuthal component. (The TRACOR Model 611 Cardioid Unit, with means for phasing of the signals from a loop antenna and a whip antenna, provides more than 30 db of discrimination in the front-to-back antenna lobe pattern.)

3-20 TIMING AND SYNCHRONIZED CLOCK SYSTEMS

3-21 The VLF tracking receiver is highly useful in timing applications involving long-term frequency synchronization of "clocks" at separated locations. By monitoring a selected VLF transmitter it is possible for each receiving location to operate from the same frequency and time base. Thus, if two timing systems are initially synchronized, they can thereafter remain locked together regardless of the fact that the elapsed time may extend into days, weeks, or years. The instantaneous "time drift" between two

synchronized clocks or timing systems need only be that introduced by uncertainties in propagation time at the respective receiving locations.

3-22 The VLF tracking receiver provides a simple means for ensuring that widely separated locations operate from the same frequency and time base. A direct measure of the time drift of the local frequency standard relative to the selected VLF station is provided by the VLF phase record. As a first step, the frequency standard should be adjusted in accordance with the procedure described in the previous paragraphs. Again, if experience has indicated that the oscillator tends to age in a particular direction, it may be preferable that the oscillator be slightly overcompensated, rather than set to a zero frequency offset, whenever the frequency adjustment is performed. For timing applications, a useful criterion for performing any oscillator adjustment may be the accumulated phase drift (in microseconds) of the MICROSECONDS counter from some initial value; for example, if it is desired that the timing system never deviate more than ±500 microseconds from some initial value, the oscillator need be adjusted only when the MICROSECONDS counter (or the equivalent chart records for the accumulated phase deviation) shows a net change approaching ±500 microseconds. A continuing plot of daily phase readings, from the MICROSECONDS counter or interpreted from the chart records, can be used in determining the actual time error which exists on any given day; this known error can be added to (or subtracted

from) the timing system output so as to give a corrected time.

3-23 Adjustment of the local frequency source so that it provides an accurate, known frequency and time base ensures that "clocks" at widely separated locations run at the same rate. There remains, however, the problem of "zero setting" the clocks; that is, a method is needed for initial time synchronization or setting in "time-of-day" information. Various schemes have been suggested for achieving time synchronization; none is fully satisfactory from an operational viewpoint under all conditions.

3-24 One synchronization method involves transporting a highly stable and accurate clock (controlled by an atomic frequency standard such as the GTC Model 304B Rubidium Frequency Standard or an ultrastable quartz crystal oscillator such as the Sulzer Model 2.5 Frequency Standard) from one location to another. If a basic frequency accuracy of one part in 10^{10} can be maintained in a transportable clock over a 24-hour interval, the accumulated time error can be held to less than 10 microseconds. For most locations within the United States, such "time" transfer could be completed within a few hours flight time, rather than 24 hours, so that "microsecond" time correlation throughout the United States is clearly feasible. It must be emphasized that, once initial time synchronization has been achieved by means of a transportable clock, phase-locked reception of the VLF standard frequency signals can thereafter be used to maintain synchronization at the initial level of accuracy.

3-25 INVESTIGATION OF VLF PROPAGATION PHENOMENA

3-26 Investigations of VLF propagation phenomena are being carried out by various agencies, here and abroad. These include studies of the diurnal change of altitude in the VLF-reflecting D layer of the atmosphere, studies of the effects of magnetic and sudden ionospheric disturbances, and comparisions of reception of the various VLF transmitters.

3-27 A sensitive VLF tracking receiver can be an invaluable tool in experimental investigations of ionospheric and propagational phenomena. With the versatile Model 599J receiver both phase and amplitude characteristics of the incoming vector signal can be independently recorded; for connector information, see schematic diagram 599769.

3-28 The AGC bias voltage will be a function both of the received carrier amplitude and the duty cycle of the keying modulation. Thus, for calibrated recordings of carrier signal level it will be necessary that allowance be made for variations in modulation duty cycles or, alternatively, that measurements be made on stations such as WWVL or NBA which transmit on a known, uniform basis.

3-29 A precision attenuator (with 50 ohm input and output impedances) may be inserted into the antenna cable lead so as to obtain a calibration of recorder deflection vs relative signal level. To make an absolute calibration of the received input signal (in microvolts at the receiver input) it is necessary that a coherent

type of generated test signal be available; a spare synthesizer module, if available, can be adjusted to give a local oscillator output equal to the RF frequency of the desired VLF test signal.

3-30 The Model 599J receiver has been used for measurements in the antipodal regions. Also, the equipment can be used for "vertical incidence" measurements of the ionospheric layer in the immediate vicinity of a VLF transmitter. For such measurements it is generally necessary that some form of special antenna system (e.g., cardioid pattern, a nulled loop, etc.) be employed.

SECTION IV

INSTALLATION AND OPERATION

4-1 INSTALLATION

4-2 Note: All words in capital letters correspond directly to a front or rear panel control or readout.

4-3 Initial Inspection

4-4 The equipment should be carefully unpacked and examined for visible damage incurred in shipment. Any damage should be reported. See paragraph 0-1.

4-5 Module Installation

4-6 Fig. 1-1 shows the modules properly installed. Care must be exercised in removing or installing the modules in the chassis to ensure that connector contacts are not damaged. Recommended installation procedure is to slide module along its rails carefully until resistance is met. Contacts may then be properly mated with a gentle, steady push. Front panel thumbscrews should be secured to prevent accidental un-mating of contacts. An exactly reversed procedure is recommended for removal of a module.

4-7 Power Connections

4-8 The equipment may be mounted in a standard 19-inch rack or located on a bench. It may be used with either a 115 or 230 volt ac, 48-62 Hz, single phase power source (see paragraph 2-23). However, before connecting the power cable to the source, verify

that the slide switch (S1) on the rear panel is in the appropriate position.

4-9 If it is desired to guard against line power failure, connections for auxiliary dc power are available at the rear panel connector labeled D.C. STANDBY. When +12 and -12 vdc sources (capable of more than 1 ampere) are connected through the mating connector supplied, receiver operation will be uninterrupted by line power failure when front panel STANDBY switch is in READY position. Note: STANDBY switch must be off when making dc power connections.

4-10 Antenna

4-11 The antenna should be connected to the rear panel coaxial input connector labeled ANTENNA. The antenna itself should preferably be mounted on top of a roof or in some clear area away from any major sources of interference. For temporary installation, an indoor location may be acceptable. Note that 100 feet of 50 ohm coaxial cable (RG-58/U) with BNC connectors is supplied with the receiver.

4-12 Frequency Standard

4-13 The precision source of 100 kHz or 1 MHz should be connected to the rear panel connector labeled 100 kHz/1 MHz INPUT. Requirements for the frequency standard are: (1) Output amplitude between 0.5 and 5.0 volts rms; (2) Frequency should be stable to 1 part in 10^7.

4-14 OPERATION

4-15 Operation of the Model 599J tracking receiver in conjunction with a particular VLF/LF station involves the following simple steps

(1) Setting the synthesizer thumbwheel and toggle switches to the desired station frequency in KILOHERTZ

(2) Adjustment of receiver GAIN control

(3) Adjustment of BLANKING level control to suppress impulse noise

(4) Selection of SERVO TIME CONSTANT

A detailed discussion of these steps is given below.

4-16 Initial Adjustment of Controls

4-17 With the antenna and frequency standard connected, the front panel controls should be set as follows before applying power.

(1) LINE switch to OFF

(2) STANDBY switch to OFF

(3) Receiver GAIN control to approximately mid-range

(4) VOLUME to approximately mid-range

(5) Synthesizer thumbwheel and toggle switches to station frequency in KILOHERTZ

(6) SERVO TIME CONSTANT to 50 sec

4-18 Plug the ac power cord into a 115 or 230 vac, 48-62 Hz outlet after verifying the proper setting of the rear panel switch, S1.

4-19 Turn the LINE switch to ON and allow 10 minutes for circuits and capacitors to reach equilibrium.

4-20 Disconnect the antenna at the receiver and observe the PHASE ERROR meter. It should show negligible deflection from its zero center. If the meter shows a steady deflection of more than 0.1 radian (with antenna disconnected), the BALANCE control directly beneath the meter should be slowly adjusted to null the meter. Reconnect the antenna.

4-21 Subsequent Adjustment of Controls

4-22 Described below are the recommended procedures for adjustment of front and rear panel controls not previously described.

4-23 Tuning the Local Oscillator: Set the digital thumbwheel switches plus the toggle switch (+0/+50 Hz) to the desired station frequency in KILOHERTZ. At least one second should be allowed for the circuit to stabilize after changing frequencies. The local oscillator frequency may be set at 1 kHz above or at 1 kHz below the received signal frequency. This is accomplished by the LOC OSC +1 kHz/-1 kHz toggle switch. It is possible to tune off a station and return to resume where tracking was left off, but only if the LOC OSC switch is in the same position it occupied before.

4-24 Adjustment of Phase Servo and MICROSECONDS Counter: With the synthesizer adjusted to give the proper LO frequency and with the receiver GAIN control set at mid-range, or higher if anticipated carrier level is quite low, the front panel meters should deflect indicating reception of a coherent VLF/LF signal.

4-25 If a signal is being received but a large phase error is present, the PHASE ERROR meter will show a definite deflection to the right or left of center. The operator may assist phase-track acquisition by using the ADVANCE/RETARD switch to adjust the servo in the same direction that the signal would: the servo should be ADVANCEd for a right hand deflection (+) of the PHASE ERROR meter and RETARDed for a left hand deflection (-).

4-26 If a large phase error exists, the servo should be ADVANCEd or RETARDed 2 to 5 microseconds followed by a wait of 5 to 10 seconds before continuing. If the operator overshoots the desired phase null condition, the meter will fully reverse its deflection. Smaller adjustments can be used as the null region is approached. NOTE: No null will exist for a station using frequency modulation or phase shift keying in which the carrier is not uniquely defined. For such transmissions, the PHASE ERROR meter may swing violently - first in one direction and then in the opposite direction. When this occurs, servo tracking cannot be relied upon even though a loud keying is audible in the earphone or (optional) receiver loudspeaker.

4-27 <u>SERVO TIME CONSTANT Adjustment</u>: The setting of this switch depends upon application and upon tracking conditions. Using the longer time constant will produce a "smoother" phase record. Shorter time constants allow tracking with larger fractional frequency offsets. For further information on problems encountered in particular locations and applications, contact TRACOR, Inc. or

its representatives.

4-28 Receiver GAIN Control Adjustment: The receiver GAIN control should be adjusted so that the CARRIER LEVEL meter indicates approximately zero db. On a keyed signal of varying duty cycle, the GAIN control should be set, by trial and error if necessary to ensure that adequate AGC will be developed at all times to prevent opening of the carrier relay. Furthermore, if it is known that the signal level will follow a predictable diurnal pattern, this behavior should be taken into account and the GAIN control adjusted so that the anticipated changes preduce neither abnormally low nor abnormally high meter readings.

4-29 During adjustment of the phase shifter it is possible for the CARRIER LEVEL meter to drop below -20 db and the CARRIER lamp to come on. This situation can occur whenever there is a 90° phase error in the AGC synchronous detector (corresponding to a similar error in phase tracking). The CARRIER lamp will go off soon after the abnormal phase error is removed.

4-30 Most VLF stations have periods of silence. At the beginning of one of these intervals, the CARRIER LEVEL will slowly drop off. If the station remains silent for some time, the CARRIER lamp will ultimately come on and phase tracking will stop. (The same effect will be observed if the antenna cable is disconnected.)

4-31 BLANKING Level Control Adjustment: The major source of noise in the VLF and LF bands, apart from local man-made signals, is the

radiation generated by lightning flashes. These bursts are known as sferics and their peculiar amplitude distribution makes them very susceptible to the noise suppression technique known as blanking. A blanking circuit is included in the Model 599J receiver. This circuit opens the signal path for a time after each sferic signal exceeds a threshold. The technique prevents the random impulses of the sferics from entering the narrow band portions of the receiver and causing false error signals.

4-32 The BLANKING level control is located on the front of the receiver (599-204) module. For strong VLF/LF signals, this control may be left in the full CCW position. For weak signals suffering interference from sferics, the setting of this control is best determined by trial and error as follows.

4-33 While watching the SFERICS lamp, slowly advance the BLANKING level control clockwise (from the extreme CCW position). SFERICS lamp flashes may occur after several turns, depending on noise conditions. For each flash the receiver's blanking switch opens. Continue rotating the control until the clockwise stop is reached or until the SFERICS lamp shows a nearly continuous dim glow. If a nearly continuous dim glow does occur, rotate the control counterclockwise until the irregular flashing mode again occurs. At this point further CCW rotation of about one or two turns is recommended.

4-34 Under some conditions an improvement of 20 db in signal/noise ratio may be gained by blanking at the sacrifice of only one db of signal power. Blanking is beneficial only when there is strong

impulse noise. On "quiet" days it does little good. During severe thunderstorm activity, however, a marked improvement in signal/noise ratio, observable both on the PHASE ERROR meter and by aural monitoring of the VLF signal will be noted.

4-35 If the receiver is located in a very high field strength region close to some VLF/LF transmitter, the blanking level discriminator may be energized by the VLF/LF carrier itself. Under such circumstances, the BLANKING level control should be reduced so that the SFERICS lamp does not flash whenever the station is keyed on. NOTE: If some VLF/LF carrier signal, rather than random impulse noise, operates the blanking circuit, there is the possibility that large phase errors can be developed, i.e., the blanking circuit is intended only for sferics and other random impulse noise signals.

4-36 Adjustment of BALANCE Control for PHASE ERROR Meter: The procedures described in paragraph 4-20 should be followed periodically, either daily or weekly.

4-37 EXTERNAL RECORD LEVEL ADJUSTment: An external recorder can be used (in parallel with the optional built-in recorder) for monitoring the phase change of the local frequency standard relative to the received VLF carrier. The external recorder, if a galvanometric type, should require not more than 1 ma current and should have an internal resistance of not more than 2000 ohms. The external recorder may be connected to the receiver at the rear panel connector (J16) labeled RECORD OUTPUT for which a mating connector is supplied. Pin definitions for the contacts

of J16 are given on schematic diagram 599769 in Section VIII of this manual.

4-38 The rear panel EXTERNAL RECORD LEVEL ADJUST rheostat, R7, is used to adjust the span of the external recorder so that full scale deflection corresponds to a 100 μsec phase change. There are two push-button switches which the operator may PUSH TO SET RECORDER LEVELS. Actuate the ZERO switch and adjust the recorder for zero reading. Then actuate the FULL SCALE switch and adjust the recorder for full scale reading. The external chart recorder is now calibrated to indicate 100 μsec relative phase shift.

4-39 Adjustment of the 10 μsec record output is the same as for the 100 μsec record output, except that R8 is used to adjust the recorder for full scale.

4-40 Adjustment of the optional built-in recorder, which is exsentially the same as for the external recorder, is discussed in detail in Appendix B of this manual.

4-41 Tracking Check: Proper tracking can be checked at any time by ADVANCing or RETARDing the servo roughly 2 to 5 μsec from its equilibrium tracking position and observing whether or not the phase servo moves back to this position. It is recommended that the servo be checked by both advancing and retarding.

4-42 Hint: It should be remembered that extremely long time constant circuits are used in the receiver, particularly in the AGC loop. Thus, in initial adjustment, the carrier level meter may

remain below its threshold and the red CARRIER lamp may remain on for some time after the phase shifter has been adjusted as described in paragraphs 4-24 through 4-27. (See also paragraph 4-29.)

4-43 Station Identification: Audio identification of the station being tracked, even in the presence of a loudly interfering station in the PHONES output or optional loudspeaker, can be aided by momentarily throwing the LOC OSC switch to its other position. The station being tracked will obviously remain at the same intermediate frequency (exactly 1 kHz) and its audio tone will therefore remain unchanged. The interfering signal, however, will shift in frequency. NOTE: The phase-tracking servo has an extremely narrow bandwidth and is consequently able to track a selected VLF/LF station in the presence of interfering signals which appear quite loud to the ear.

SECTION V

PRINCIPLES OF OPERATION

5-1 SYSTEM DESCRIPTION

5-2 Basic System Operation

5-3 Figure 5-1 shows the principle of basic phase-locked loop tracking that is employed by the Model 599J receiver. For simplicity, signal and standard frequencies are assumed to be the same, and specific details of receiver action that are not relevant to the basic tracking principle are not shown.

5-4 Behavior of the system is characteristic of a position-tracking servo. ϕ_s, which represents the apparent difference between signal and frequency standard phases, is the basic tracking system output; provision for reading out ϕ_s on a recorder is therefore shown.

5-5 Detailed System Operation

5-6 Several techniques that are new to the VLF/LF field are employed by the Model 599J receiver. These are the step-wave modulator, image rejection by outphasing, and modulation gain control. To avoid digressing during the general discussion of receiver system operation, these techniques are briefly described first (paragraphs 5-7 through 5-12).

5-7 Image Rejection By Outphasing: Outphasing methods of generating single sideband signals are familiar to many engineers. An analogous method, shown in basic form in Figure 5-2, is employed

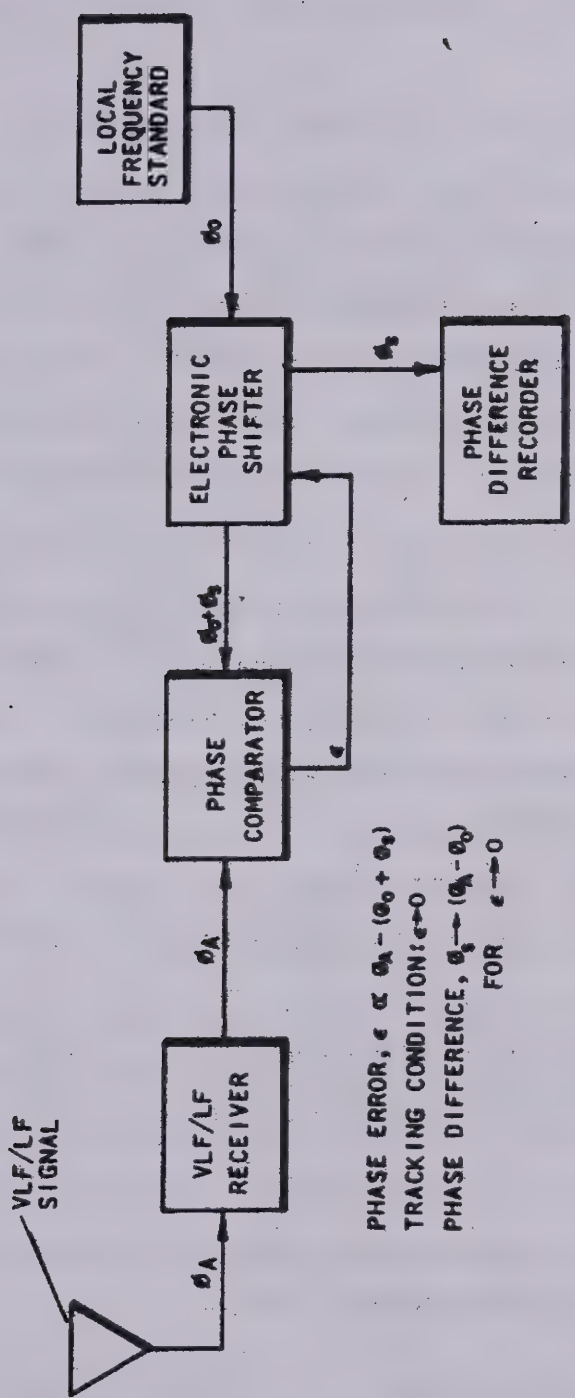

A6-86-7

Figure 5-1. Simplified Diagram of Phase Tracking System Operation

by the Model 599J to eliminate image responses without the use of filters.

5-8 In Figure 5-2 two tacit basic assumptions are made. One is that the in-phase and quadrature channel mixers are precisely balanced and the other is that the 90-degree phase shifter does not introduce a change in signal amplitude in the upper channel. For simplicity, amplitude coefficients and phase angles that apply to both channels are not shown. Also not shown are the sum frequency terms that would appear at the mixer outputs.

5-9 System expressions show that IF (intermediate frequency) voltages due to an image frequency signal cancel out in the summing network, but IF signals arising from an RF (radio frequency) signal at the desired frequency reinforce one another. The actual values of RF signal and local-oscillator frequencies are not involved in rejecting the image; therefore, this method lends itself nicely for use where good image rejection over a broad tuning range is an objective.

5-10 It is seen in Figure 5-2 that the local-oscillator frequency is below the signal frequency. If the local-oscillator frequency were above the signal frequency, it would be necessary to change the phase of one of the two quadrature local oscillator mixer inputs by 180 degrees in order to pass the desired signal frequency and reject the new image frequency.

5-11 <u>Modulation Gain Control</u>: If a signal is connected to a load

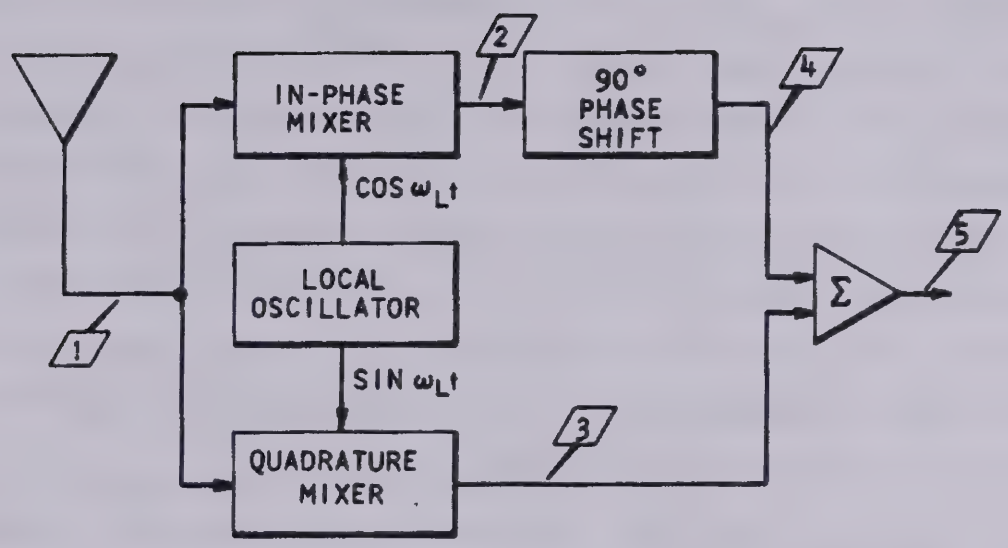

ω_s = DESIRED SIGNAL FREQUENCY

ω_i = IMAGE FREQUENCY

$\omega_s - \omega_L = \omega_o$

ω_L = LO FREQUENCY

ω_o = INTERMEDIATE FREQUENCY

$\omega_L - \omega_i = \omega_o$

SIGNAL	SYSTEM EXPRESSION				
	1	2	3	4	5
DESIRED ω_s	COS $\omega_s t$	COS $\omega_o t$	-SIN $\omega_o t$	-SIN $\omega_o t$	2 SIN $\omega_o t$
IMAGE ω_i	COS $\omega_i t$	COS $\omega_o t$	SIN $\omega_o t$	-SIN $\omega_o t$	0

A6-86-5

Figure 5-2. Block Diagram of Basic Method of Image Rejection by Outphasing

through a switch that is turned on and off at a rate which is high relative to the signal frequency (see Figure 5-3), the average signal voltage at the load is proportional to the duty ratio of the switching cycle. If the load incorporates a filter that averages for a time much longer than the period of the switching cycle, the filter output voltage corresponds to the signal input voltage attenuated by a factor proportional to the duty ratio. Furthermore, if several such switch-filter circuits are cascaded, the effect on the output signal is to change its amplitude in proportion to $(t/T)^n$, where (t/T) is the duty ratio and n is the number of stages in cascade. It is clear that in this way gain control extending over a wide range can be achieved.

5-12 Step-Wave Modulator: The term"step-wave modulator" refers to a superheterodyne mixing technique that assures accurately-controlled mixing action between a signal and a local oscillator fundamental frequency voltage but prevents interaction between the signal and harmonics of the local oscillator fundamental. Figure 5-4 illustrates the principle of th step-wave modulator mixing system employed in the Model 599J. The outputs of the modulators are composed of the summed outputs of several fixed attenuators. The attenuators are fed in parallel by the phase-split VLF/LF signal voltage and are switched into or out of the signal path with programmed switches. By a suitable choice of switch programs and attenuator coefficients, the attenuation imposed on the signal is made to vary in a "step-wave" that closely approximates a pure sine wave.

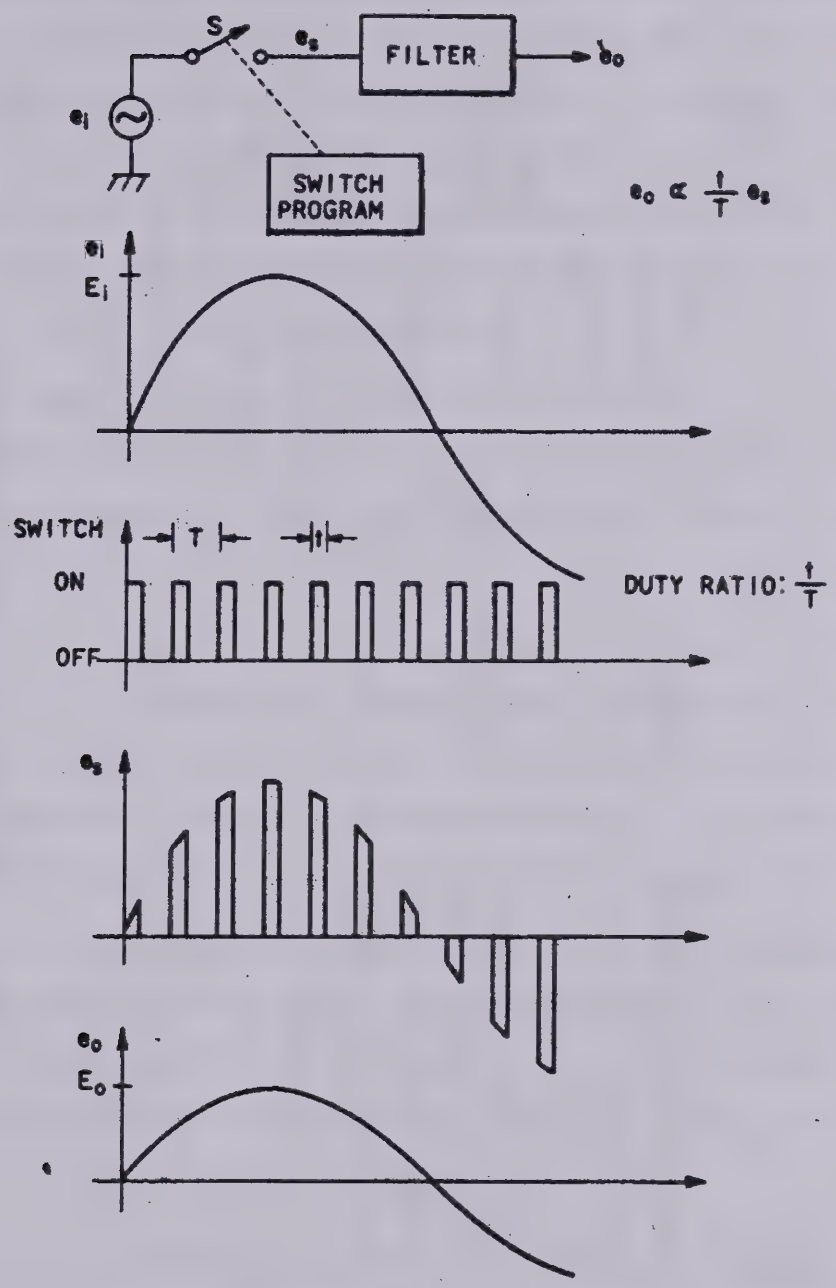

A6-86-6

Figure 5-3. Block Diagram of Basic Modulation Type Attenuation System and Associated Waveforms

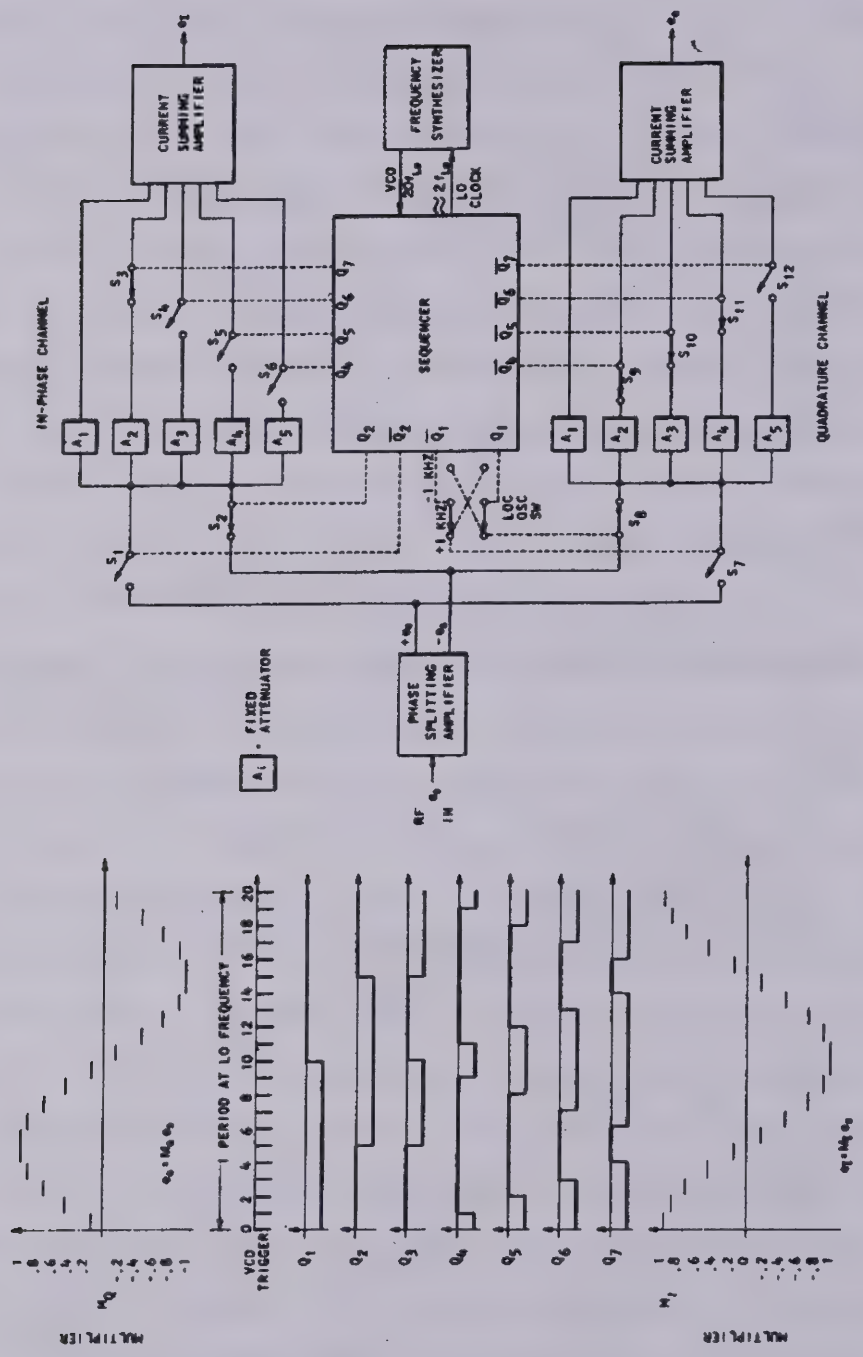

B6-86-2

Figure 5-4. Detailed Functional Block Diagram of Dual (I and Q) Step-Wave Modulator and Sequencer Waveforms

5-13 Overall Receiver System Operation: A block diagram of the Model 599J receiver system is shown in Figure 5-5. RF signals entering the receiver are processed first by a low-noise preamplifier. The signal output of the preamplifier, at a substantially increased power level, is used to drive a signal channel low-pass filter circuit that cuts off at 100 kHz and to operate an overload-detector circuit and a blanking circuit.

5-14 The purpose of the overload-detector circuit is to indicate to the operator that the RF circuits are in danger of saturating, an abnormal condition usually due to using an antenna that is too large, or to operating the receiver too near a powerful transmitter.

5-15 The blanking detector senses sharp noise impulses which are received by the antenna and, during short periods when such noise is present, shorts out the noise to prevent its getting into subsequent RF and IF circuits. A threshold control is provided to permit adjustment of the threshold at which blanking occurs.

5-16 After leaving the low-pass filter, the signal enters a phase-splitting amplifier that forms closely balanced inverted and non-inverted output versions of the input signal at a suitable impedance and voltage level to drive subsequent parallel mixer channels.

5-17 I and Q Step-Wave Modulators

5-18 The mixers employed in the Model 599J receiver to accomplish the conversion of the RF signal to an IF signal are of the step-wave modulator type described in paragraph 5-12. The actual

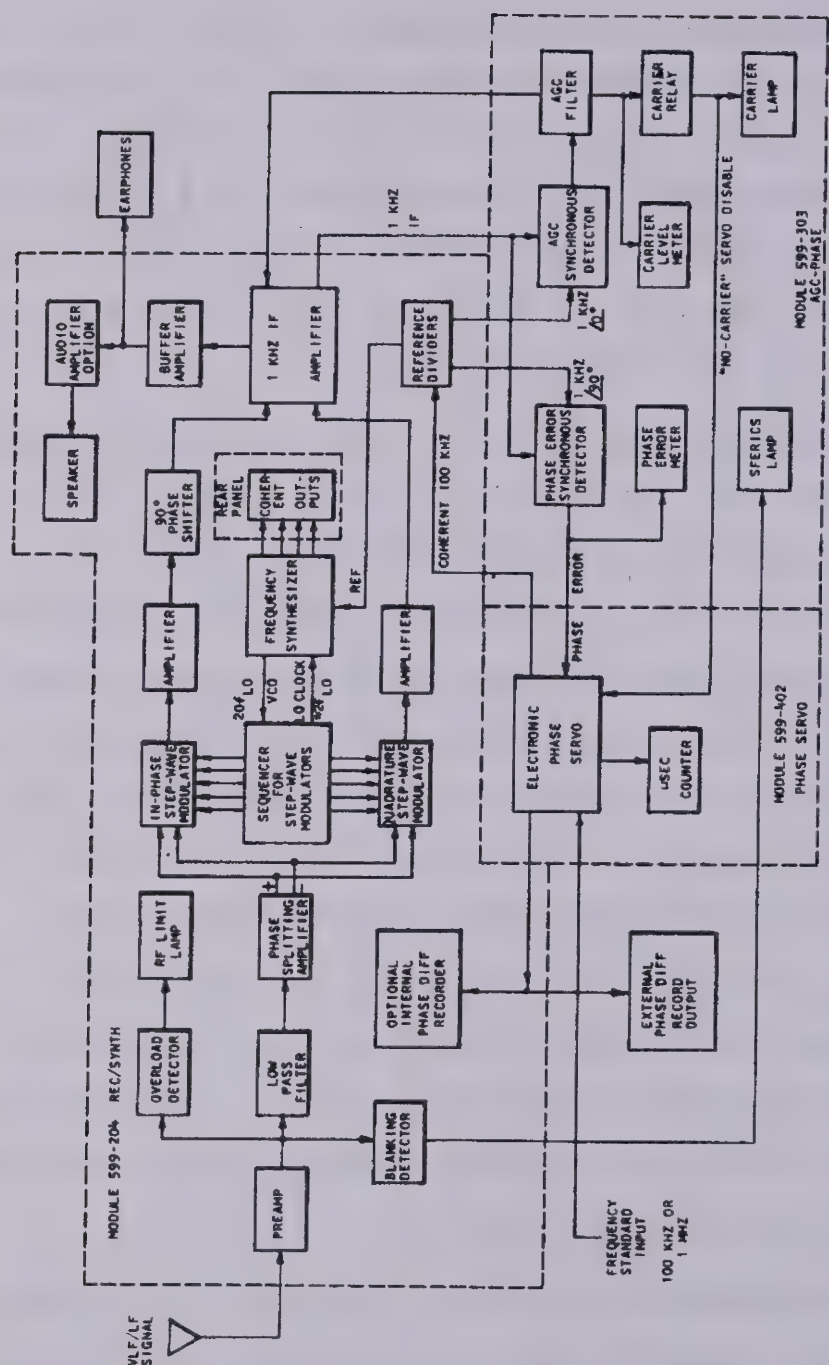

B6-86-3

Figure 5-5. Basic Functional Block Diagram of the Model 599J Tracking Receiver

modulator system used in the two receiver channels is shown in the block diagram of Figure 5-4. Each of the two modulators ("I" and "Q") is capable of attenuating the incoming signal to five different heights), and step transitions occur 20 times in each local oscillator cycle.

5-19 A sequencer composed of seven RST type flip-flops provides an appropriate switching program for the electronic switches of the "I" and "Q" step-wave modulators. The timing diagram for the sequencer is shown as a part of Figure 5-4.

5-20 The trigger inputs of the flip-flops in the sequencer are all connected in parallel, so that any flip-flop transition must coincide in time with a VCO (voltage-controlled oscillator) trigger pulse. Times at which flip-flop transitions do occur are determined by gating circuits which are interconnected to achieve the sequence of transitions shown in the timing diagram of Figure 5-4. In the timing diagram it is seen that Q1, Q2, Q4, Q5, Q6, and Q7 sequencer outputs (not to be confused with Q for quadrature or transistor reference designation) may be used for switching attenuators into and out of the signal path in the "I" step-wave modulator. Moreover, it is evident that the program supplied by Q4 through Q7 for the switches in the "I" step-wave modulator is available "at quadrature" from $\overline{Q4}$ through $\overline{Q7}$ in reverse order, for the switches in the "Q" step-wave modulator. It should be noted at this point that although series switches are shown in the modulators (Figure 5-4) for conceptual simplicity, both series

and shunt grounding switches are employed in the actual circuits as described later.

5-21 IF Amplifiers

5-22 As can be seen in Figure 5-5 the "I" and "Q" step-wave modulators are followed by amplifiers. The functions of these are to provide the proper load termination for the step-wave modulators and to drive the phase-shifting and image-outphasing summing network. These amplifiers are designed for low noise factor and high gain stability.

5-23 Following the image-cancelling summing amplifier, there are six tuned IF amplifier stages that are essentially identical except for feedback networks that determine their pass- and reject-band characteristics. In each of the first four IF amplifiers in this chain, negative feedback through a twin T network is employed to achieve a conventional active band-pass filter characteristic. The overall 3 db bandwidth of the four active filter amplifiers is approximately 40 Hz.

5-24 Signal-gating circuits are employed to effect joint automatic and manual gain control. In these circuits, transistor electronic switches are used between successive amplifier stages to achieve the VCG (voltage-controlled gain) function. There are five such switches, synchronously driven.

5-25 Actual gain control voltage is obtained from a summing network which combines voltages from a front-panel manual "GAIN" control

and from the AGC processing circuits.

5-26 Local Oscillator System Operation: Figure 5-6 shows a block diagram of the basic frequency and phase control system for the local oscillator of the Model 599J. In this diagram it is shown that the VCO output frequency is reduced by a phase coherent or "synchronous" divider by the factor 1/M, where M-100 Hz is the desired VCO output frequency. The output of the divider is compared in phase to a 100 Hz reference signal, and the resulting comparator output voltage is fed, after operational integrator processing, to the VCO as a control signal.

5-27 The phase detector output voltage can remain at zero only if VCO frequency is exactly M-100 Hz and if VCO phase assumes a value for which divider output and 100 Hz reference are at quadrature. Thus, any VCO frequency or phase "error" will produce a corresponding error voltage at the output of the comparator. This error voltage will produce VCO control action that makes the error tend to go to zero. The system dynamics are characteristic of a second-order, or Type II, tracking servo.

5-28 Coherent Reference Divider

5-29 The coherent reference divider generates the 100 Hz and 50 Hz voltages that are coherent with the 100 kHz phase servo system output and that serve as reference for synchronizing local oscillator phase. Coherent quadrature 1 kHz voltages are also generated to provide reference voltages to the phase error and AGC synchronous

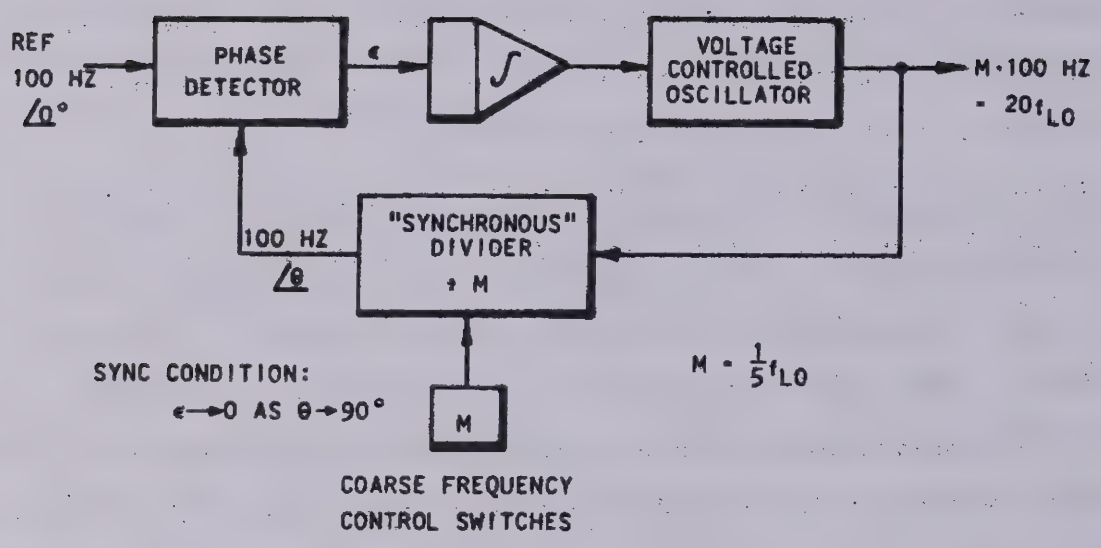

Figure 5-6. Basic Block Diagram of VCO-Preset Counter (Synchronous Divider) Synthesizer

detector circuits in the AGC-Phase module.

5-30 Preset Counter Decade Logic

5-31 Counting decades in the Model 599J synthesizer employ four R-S flip-flops that are triggered in parallel for synchronous carry operation (i.e., no carry delay). The preset synchronous counter elements include three counting decades plus related gates and front-panel tuning selector switches. The tuning switches and the local oscillator mode switches (± 1 kHz and +0/+50 Hz) determine the counter cycle length by controlling the initial and final counter states. The final counter state is controlled by the thumbwheel tuning switches (tens, units and tenths of kHz); the initial counter state is determined by the setting of the mode switches.

5-32 Phase Detector and VCO

5-33 The preset counter output frequency is actually twice the desired value and is reduced by a factor of one-half. The resulting square wave is sampled by a switch operated at 100 Hz in synchronism with coherent reference divider time. The output of the sampling switch drives an operational integrator. The integrator output controls the VCO fine frequency and phase; coarse frequency is controlled by current supplied through a second set of coded contacts in the thumbwheel tuning assembly. Current supplied for coarse tuning is proportional to frequency.

5-34 Acquisition System and Phase Standardization

5-35 The acquisition system forces fast frequency and phase acquisition when synthesizer frequency is changed, or when power is first applied.

5-36 If VCO frequency is high, then a slewing current is caused to flow into the operational integrator input. This causes the VCO frequency to fall at a rapid, prescribed rate. The slewing current continues to flow until the desired VCO frequency is reached. If VCO frequency is low, a slewing current is caused to flow into the operational integrator which in turn causes the VCO frequency to be raised at a prescribed rate. The slewing current is cut off when the desired frequency is attained. Thus, any initial gross error brings about a rapid correction to VCO frequency. Remembering that the 100 Hz phase reference signal shown in Figure 5-6 is independent of synthesizer frequency, it should be clear that when synthesizer tuning is changed, and later returned to the original frequency, the local oscillator phase is forced to return to its original value.

5-37 THEORY OF OPERATION

5-38 Receiver (Model 599-204)

5-39 RF and IF Circuits: The ways in which the RF and IF circuits operate are discussed in paragraphs 5-40 through 5-77 below:

5-40 Preamplifier

5-41 An RF signal entering the receiver is coupled through transformer T1 (see schematic diagram 9747) into a low-noise RF

preamplifier circuit consisting of Q1, Q2, Q3, and Q4. The input impedance of input transistor Q3 is raised by negative feedback applied to its emitter by Q1. This feedback also serves to lower the impedance from which common base amplifier Q4 is driven. Q4 serves to translate the amplified signal at the emitter of Q3 to the base of Q2 which is near +10 volts; in its turn, Q2 acts as the preamplifier output transistor to drive, in parallel, the subsequent signal channel RF filter system and the impulse blanking and RF/IF limit circuits. The output impedance at the collector of Q2 is held low, and both input impedance and gain of the overall preamplifier are stabilized by negative feedback from the collector of Q2 through R20, R17, and R18 to the preamplifier input. The gain of the receiver is normalized by adjusting R20. For special applications, different antenna heights may be accommodated by suitable adjustment of R20.

5-42 Blanking Circuits

5-43 Blanking is accomplished with the shunt switch action of Q5 and Q6 (schematic diagram 9747). These switches short impulses in the signal channel to signal ground (+5 volts) when the impulses are detected by blanking detectors Q14, Q15, Q16, and Q17. Q16 and Q17 sense positive-going impulses, and Q14 and Q15 sense negative going impulses.

5-44 Threshold voltage is applied to the gate terminal of field-effect transistor (FET) Q25 from the BLANKING level control. The amplitude of the threshold voltage is between zero and 5 volts as determined by the control setting. Field-effect transistor Q25 and resistor R65 are analogous to a voltage divider circuit with Q25 functioning as a variable resistance. When the threshold voltage at the gate terminal of Q25 is 5 volts, the FET presents a low impedance to the signal at the junction

of R64 and R65, and essentially shorts the signal to the 5-volt bus. As the threshold voltage is reduced toward zero volts, the impedance of the FET increases, becoming maximum when the threshold voltage is at zero volts. The wide range of attenuation obtained from Q25, along with the amplification obtained by Q20, Q21, and Q26 provide the operator with a broad range of blanking adjustment.

5-45 The preamplifier output at the collector of Q2 consists of positive and negative RF impulses. Positive impulses are applied through emitter follower Q26 to inverter Q21. The negative output from Q21 is applied through emitter follower Q20 to the base of Q17, causing the base voltage to drop. As Q17 base voltage drops, a point is reached where the base potential of Q16 is more positive than that of Q17. At that time, Q16 conducts and turns on blanking switch driver Q18. Conduction of Q18 turns on blanking switches Q5 and Q6 to blank the signal. Capacitor C7 supplies peak-detector action in the blanking circuit so that blanking is performed on an impulse envelope rather than a cycle basis.

5-45(A) Negative impulses at the collector of Q2 are inverted by Q21 and applied to the base of Q14. The base voltage of Q14 increases until it becomes more positive than the base voltage of Q15. At that time, Q14 conducts and turns on blanking switch driver Q18, which turns on blanking switches Q5 and Q6.

5-46 Blanking signals translated to a suitable level for operating the SPERICS lamp on the AGC-Phase module, Model 599-303, are provided by Q19. External blanking signals are coupled to the base of Q18 through R49; blanking may be produced by connecting terminal J to ground or -10 volts. An open circuit at J permits normal operation of the blanking circuits.

5-47 RF Limit Circuit

5-48 The output of the preamplifier is also compared to a second threshold by Q22 and Q23 (schematic diagram 9747). These transistors are in a circuit that warns the operator of possible

saturation in the receiver's RF stages. Q22 and Q23 detect the presence of CW-type voltages above a threshold determined by R15 R44, and Q24 drives the front-panel "RF LIMIT" indicator.

5-49 RF Filter

5-50 Signal-channel RF current passes through a low-pass RF filter that includes L6 through L9, and C13 through C16 (schematic diagram 9747). The cut-off frequency of the filter is approximately 100 kHz.

5-51 Phase-Splitting Amplifier

5-52 After low-pass filtering, the signal enters an amplifier that includes Q7 through Q13 (schematic diagram 9747). The purpose of the amplifier is to provide inverted and non-inverted versions of the input signal.

5-53 Negative feedback from the emitter of emitter follower Q13 stabilizes the gain of the amplifier relative to its inverted output; a second feedback loop feeds the sum of the inverted and non-inverted outputs (at the emitters of Q13 and Q12, respectively) to the base of Q8. The negative feedback of the second loop holds the base of Q8 near +5 volts (signal common) so that the inverted outputs are closely balanced. Residual balance error is removed by adjusting R31.

5-54 Dual Step-Wave Modulators

5-55 As can be seen in schematic diagram 599707, balanced inverted

and non-inverted signals obtained from the phase-splitting amplifier enter the dual modulator circuits at terminals W and V, and are carried in parallel to in-phase ("I") and quadrature ("Q") step-wave modulator circuits. (Refer to Figure 5-4.)

5-56 In the Q-channel step-wave modulator, Q1 and Q2 are saturating switches driven out-of phase at the local oscillator fundamental frequency by sequencer transistors Q27 and Q28. Q1 and Q2 feed the signal, periodically inverted at the local oscillator rate, into a switched attenuator system that includes R2 through R10 and Q3 through Q6.

5-57 In the modulator circuits, the switched attenuators are exemplified by the circuit composed of R3, R7 and Q3. Q3 is switched on and off by a base current supplied by sequencer transistor Q40. When Q3 is open, signal current obtained from the emitter of Q1 or Q2 flows through R3 and R7 into the current-summing input of the first IF amplifier in the Q-channel. When Q3 is conducting, however, the signal is shunted to signal common and does not contribute to the IF signal input. Q4 through Q6 operate in the same way to vary the signal currents entering the IF amplifier in a step approximation to a sinusoid in accordance with the program shown in basic form in Figure 5-4.

5-58 Operation of the I-channel modulator is essentially the same as that described for the Q-channel. In the I-channel, Q15 and Q16 are the inverting switches, and Q17 through Q20 are the attenuator switches. Q11 through Q14 are used in an electronic reversing

switch circuit that permits the local oscillator reference phase to the I-channel modulator to be reversed when the front-panel LOC OSC switch is switched from one position to the other.

5-59 First IF Amplifiers

5-60 In the Q-channel the IF amplifier employs Q7, Q8, Q9 and Q10 in a highly stable feedback amplifier (schematic diagram 599707) negative feedback through R12 reduces the input impedance of the amplifier at the base of Q7 to an extremely low value to prevent interaction between step-wave modulator attenuators. C2 and C40 prevent switching transients from the collectors of Q3 through Q6 from interfering with proper low-level signal operation of Q7. The Q-channel IF output appears at the collector of Q10.

5-61 Q21 through Q24 are the IF amplifier transistors for the I-channel. The 1 kHz I-channel output is taken from the collector of Q24.

5-62 Modulator Sequencer

5-63 Q25 through Q32 and Q39 through Q44 (schematic diagram 599707) are transistors in the seven flip-flops of the modulator sequencer circuits. The operation of these flip-flop circuits in producing the required program sequence is covered in paragraphs 5-17 through 5-20.

5-64 Positive-going input pulses at 20 times the local oscillator frequency from the synthesizer VCO appear at terminal A. Q33 acts as an inverting trigger amplifier to drive all seven sequencer

flip-flop trigger inputs in parallel. Quadrature-related voltages at the local oscillator frequency appear at the collectors of Q25, Q26, Q27 and Q28.

5-65 Synthesizer Clock Pulse

5-66 The clock pulse that is "counted" by the synthesizer is formed at the collector of Q34 by the action of gate transistors Q35, Q36, Q37 and Q38 (schematic diagram 599707).

5-67 IF Amplifier

5-68 The main IF amplifier circuits are shown in schematic diagram 599706. I- and Q-channel IF voltages are applied to terminals Z and Y, respectively. The base terminal of Q1 serves as a current-summing node for signal currents passing through C1 and R1. The 90 degree phase-shift action required for image outphasing (Figure 5-2) is thus provided at 1 kHz by C1. R2 and R1 permit fine adjustment of the signal channels for proper phase and amplitude balance to achieve a high degree of image rejection. Q1 is thus the input transistor of the first image-free IF stage. The stage consists of transistors Q1, Q2 and Q3 with negative feedback from the output to the input through R9 and C4 to lower the stage input impedance to a value sufficient to assure true current summing.

5-69 Following the first image-free IF stage are four essentially identical tuned IF stages, where pre-detection selectivity in the receiver is determined. Tuning is accomplished by feeding the output of the stage back to its input through a twin-T network

that has a transmission null at 1 kHz. The network (consisting of R87, R88, R89, C24, C25 and C26 in the first tuned stage) introduces no negative feedback at 1 kHz, so that the amplifier response peaks at this frequency. R90 and C27 produce the desired stage bandwidth by introducing controlled feedback at the network null frequency. Suitable choice of R90 and C27 (and their counterparts in the other three stages) establishes the overall 3 db bandwidth of the IF amplifier chain at nominally 40 Hz.

5-70 Following the fourth tuned IF amplifier stage are two low-pass amplifier stages that bring the overall IF gain up to the required level. Q28 is driven by the second low-pass amplifier to produce the output IF signal that is taken to the synchronous detector circuits of the AGC-Phase module, Model 599-303.

5-71 Audio Amplifier

5-72 The IF output is also taken to the "VOLUME" control on the front panel (schematic diagram 599750). The wiper of the control potentiometer returns to the base of Q29 (schematic diagram 599706), one of a differential amplifier pair. Audio output for earphones monitoring or for driving an optional loudspeaker circuit is taken from the collector of Q30, the other transistor in the pair.

5-73 AGC Switches and Driver

5-74 System theory of gain control by modulation is discussed in paragraphs 5-11, 5-24 and 5-25 and the applicable block diagram is shown in Figure 5-3. Implementation in the circuit is

accomplished by transistor switches Q8, Q12, Q16, Q20 and Q24 (schematic diagram 599706), which modulate the signal between successive IF stages, and by a modulator driver circuit that includes transistors Q31 through Q38.

5-75 In the operation of the modulator driver, negative-going pulses at 100 kHz are received at the base of Q31 from the coherent divider circuit. These pulses periodically short C19 (which otherwise charges through R70) to the +10 volt bus, producing a negative-going sawtooth voltage at the collector of Q31. This sawtooth voltage is coupled into the base of Q32, first transistor in a modified Schmitt trigger circuit which consists of Q32 through Q35. Some time after the voltage at C19 is reset, the sawtooth at the base of Q32 reaches a level at which Q32 begins to conduct. When Q32 conducts, its collector current turns Q35 on. Q35 collector current, coupled through C20, reinforces the turn-on of Q32. As a result of this regenerative action, the base and the emitter of the modulator driver transistor Q33 are pulled to near ground. Until this time in the cycle, modulator switches Q8, Q12, Q16 Q20 and Q24 have been closed and thus the IF signal between stages has been blocked. But when the Schmitt trigger action pulls the potential at the emitter of Q33 to near ground, this potential is distributed to the modulator switches to open them and thus to permit signal to flow between the IF stages. To complete the cycle a 100 kHz pulse shorts out C19; this in turn opens the collectors of Q32 and Q35, returning the emitter of Q33 to near +10 volts and

turning the modulator switches on to again prevent the flow of IF signal current between stages.

5-76 The duty ratio of the modulator cycle (and thus the gain of the receiver) is controlled in response to the control input by feeding a current from the collector of Q34 to the base of Q32. At the base of Q32 the current is summed with the sawtooth from C19. This current is obtained by a comparison process that involves differential comparator transistors Q37 and Q38, switch Q36 and averaging network elements that include R80 and C22. Because of Q35 emitter current, Q36 is on when the modulators pass IF signal, and off when signals are blocked by them. A dc voltage related to the duty ratio at the collector of Q36 is supplied to the base of Q37 through R80 with the ripple removed by C22. This voltage is compared to the system gain control voltage at the base of Q38. The gain control voltage developed at the base of Q38 is the weighted sum of an MGC (manual gain control) voltage from the front-panel GAIN control (schematic diagram 599750) applied to R116 and an AGC (automatic gain control) voltage from the AGC-Phase module (schematic diagram 599771) applied to R117. Any significant difference between the voltage at the base of Q37 results in an "error" current in the collector of Q38 which, inverted by Q34, tends to oppose the duty ratio error. High gain in this control system results in low intrinsic duty ratio error.

5-77 For IF gating, positive voltage may be applied to the base of Q36 through R79 from an external programmer. The IF amplifier

cannot pass signals so long as Q36 remains on.

5-78 Local Oscillator Synthesizer: Paragraphs 5-79 through 5-89 describe the circuits which implement the functions described in paragraphs 5-26 through 5-36. Reference designators will refer to schematic diagrams 599708 and 599709 in Section VIII.

5-79 Coherent Reference Divider

5-80 In the coherent reference divider (schematic diagram 599708), the coherent 100 kHz signal is reduced to 400 pps by five pulse-type dividers consisting of Q14 through Q23. The first divider stage, consisting of Q23 and Q22, is actually a one-to-one divider used as a pulse shaper. A discussion of the operation of the third divider stage, which incorporates Q19 and Q18, will exemplify the operation of the others.

5-81 Except for a short interval at the beginning of a cycle of counting, Q19 and Q18 are non-conducting. At the beginning of this non-conductiong period, the emitter of Q19 is near +10 volts, and timing capacitor C15 charges through resistor R79, taking the emitter of Q19 toward +5 volts. Negative-going pulses, at 20 kpps and with a 5-volt peak amplitude starting at approximately +10 volts at the emitter of Q20, are reduced in amplitude by R81 and R75 at the emitter of Q18. These pulses couple through timing capacitor C15 to the emitter of Q19, but up to a point in the cycle they cannot initiate conduction in Q19 because of the reverse bias. Finally, however, charging of C15 brings the Q19 base-to-emitter

voltage near enough to conduction level to allow one of the timing pulses to push Q19 into conduction. When this happens, Q19 collector current causes current flow in the base of Q18. The resulting emitter current of Q18 is coupled back through C15 into Q19. This regenerative action quickly causes Q18 and Q19 to conduct heavily, thereby discharging C15 quite rapidly. C15 must supply current to maintain a voltage drop of approximately 5 volts across R78, when Q18 and Q19 have nearly depleted the charge on C15. When C15 can no longer supply this current, the drop in voltage across R78 turns Q18 off. The rise in voltage of about 5 volts at the emitter of Q18 is coupled through C15 to the emitter of Q19 to quickly cut Q19 off. At this time the voltage at the emitter of Q19 is again near +10 volts C15 begins to charge toward +5 volts to start a new counting cycle.

5-82 When Q18 and Q19 are both in conduction, a 5-volt negative pulse is produced across R75; this voltage is coupled by R76 into the next stage to synchronize the timing cycle there. Timing components C15 and R79 determine the length of the counting cycle. In this case, the cycle is five input pulse periods long; that is, the 20 kpps input is divided down to 4 kpps.

5-83 Q1 through Q4 are used in a divide-by-four circuit consisting of two flip-flops with gates interconnected so that quadrature outputs at 100 Hz are developed at the transistors' collectors. The circuit is triggered by the 400 pps output from the emitter of Q14. Q7 through Q10 are in another divide-by-four circuit whose four

outputs are at quadrature at 1 kHz. The trigger drive for this circuit is the 4 kpps output from the emitter of Q18. Q5 and Q6 are used in a simple binary which divides the 100 Hz output from Q4 down to 50 Hz for use as a phase reference in the synthesizer.

5-84 Q24 is employed to trigger all dividers (pulse and binary) to a prescribed initial condition. A +5 volt pulse is required at the input to Q23 (terminal H) to set the dividers.

5-87 The VCO function is performed by Q14, Q18 and Q19 (schematic diagram 599709). Q14 and Q18 are connected as a relaxation oscillator timed by Q10 collector current flowing into timing capacitor C14. The collector of Q10 acts as a current source to charge C14 in the oscillator; the magnitude of the current, and thus oscillator frequency, is determined jointly by resistance switched between the emitter of Q10 and ground by the front-panel tuning switches (coarse tuning), and by the voltage at the base of Q10. Positive-going VCO output pulses at 20 times the local oscillator frequency are fed to terminal K.

5-88 Operational Integrator

5-89 The operational integrator circuit is shown in schematic diagram 599709. This circuit, consisting of transistors Q13A, Q13B, Q16, Q15, Q12 and Q11, has a differential input and a balanced output. The base of Q13B is driven by the output of the phase detector switch (emitters of Q8 and Q9) and the slewing output from one of the frequency steering flip-flops (junction of CR3 and CR8).

Integrator output to control VCO frequency and phase is taken from the collector of Q12. Feedback that determines integrator behavior is taken from the collector of Q12 to the base of Q13B through C11, R 39 and C8. Operating point stabilization is achieved by common-mode feedback from the collectors of Q11 and Q12 to the bases of Q13A and Q13B through R51 and R52. Bias balance is achieved by adjusting R48.

5-90 AGC-Phase (Model 599-303)

5-91 AGC Channel: From Figure 5-7 and schematic diagram 599771 (assembly 599799) is it seen that the 1 kHz IF signal is further amplified by the emitter-coupled amplifiers, Q314 and Q315, operating push-pull into a common load, T301B. Coherent detection of the carrier for gain control purposes is accomplished by commutating the output of the secondary of T301B at a 1 kHz rate (divided down from the 100 kHz/1MHz standard) by Q3 and Q4, respectively PNP and NPN symmetric switching transistors. Filtering of the commutated output is performed by C307 and C307A.

5-92 In normal operation, this synchronous commutation or "phase detection" of the carrier produces an average output voltage at J on assembly 599799 (all test points refer to assembly 599799 unless otherwise noted). This voltage is proportional (neglecting sign) to the carrier level at A.

5-93 The synchronous detector output appearing at J is amplified and filtered by a dc amplifier employing Q5, Q6, Q7 and Q8.

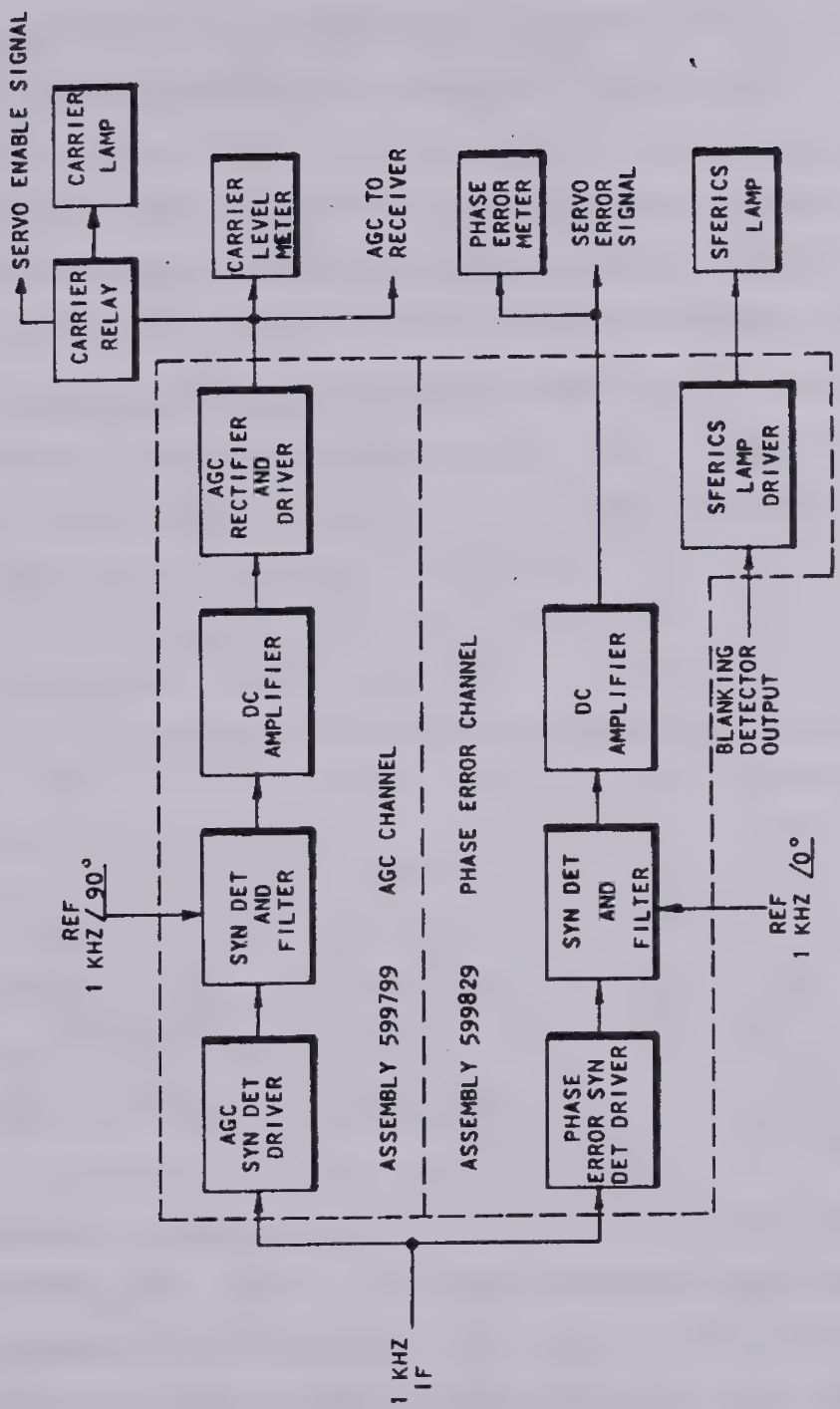

A6-86-12

Figure 5-7. AGC-Phase Error Amplifier, Series 599-303

Filtering with a time constant of approximately 125 seconds is accomplished in this amplifier by means of feedback through C6 to the base of Q7.

5-94 During normal operation of the receiver, the detected carrier at J may be positive or negative depending upon the phasing of the 1 kHz reference signals to the AGC and Phase Synchronous Detectors.

5-95 To allow for normal operation under both of these alternatives the following scheme is used. The detected carrier at J produces a balanced differential output from the AGC amplifier between points and Q10 which are held off by the emitter potential established at the wiper of R20. This threshold provides a delay in the onset of AGC action: the potential at the wiper of R20 is adjusted to be approsimately 1.5 volts below the equilibrium at DD and T when the voltage at J remains at zero.

5-96 When the voltage at J is large enough to bring DD or T (as the case may be) below the R20 wiper potential, then Q11 is turned on and signal current is conducted by Q12 and Q13, amplifiers which provide the AGC signal to the receiver and drive to the carrier level meter M301. Q13 also provides a dc signal for external recording of the carrier level.

5-97 <u>Phase Error Channel</u>: The operation of this circuit is essentially the same as the one just described. In this case, however, the 1 kHz reference signal is at quadrature with the IF signal so that the voltage at J on assembly 599829 normally averages zero.

5-98 Deviations of this voltage from zero are amplified by a dc operational amplifier incorporating Q5, Q6, Q7, Q8, Q9 and Q10. The output of the amplifier is limited by feedback Zener diodes VR1 and VR2. The output of the amplifier drives the electronic servo, phase error meter, and phase error RECORD OUTPUT to the external recorder and the optional internal recorder.

5-99 Phase Servo, (Model 599-402)

5-100 Most of the components in the Phase Servo module are mounted on two plug-in printed circuit boards, assemblies 599569 and 599570, as shown in the block diagram, Figure 5-8. For schematic diagrams of the module assemblies see drawings 599392, 599395 and 599396 in Section VIII.

5-101 The phase error signal from the AGC-Phase module is first integrated and then inverted by appropriately connected operational amplifiers. Provision is also made for a Doppler input voltage. A level detector senses the output levels of the integrator and of the inverting amplifier. When either level exceeds a certain threshold, a monostable multivibrator is triggered and the multivibrator then drives the bi-directional electro-mechanical counter and the transistor switches that reset the integrator. The counter is steered (a count is added or subtracted) by the output levels of the integrator and the inverting amplifier immediately before the monostable multivibrator is triggered. The portion of the phase servo described in this paragraph may be considered a

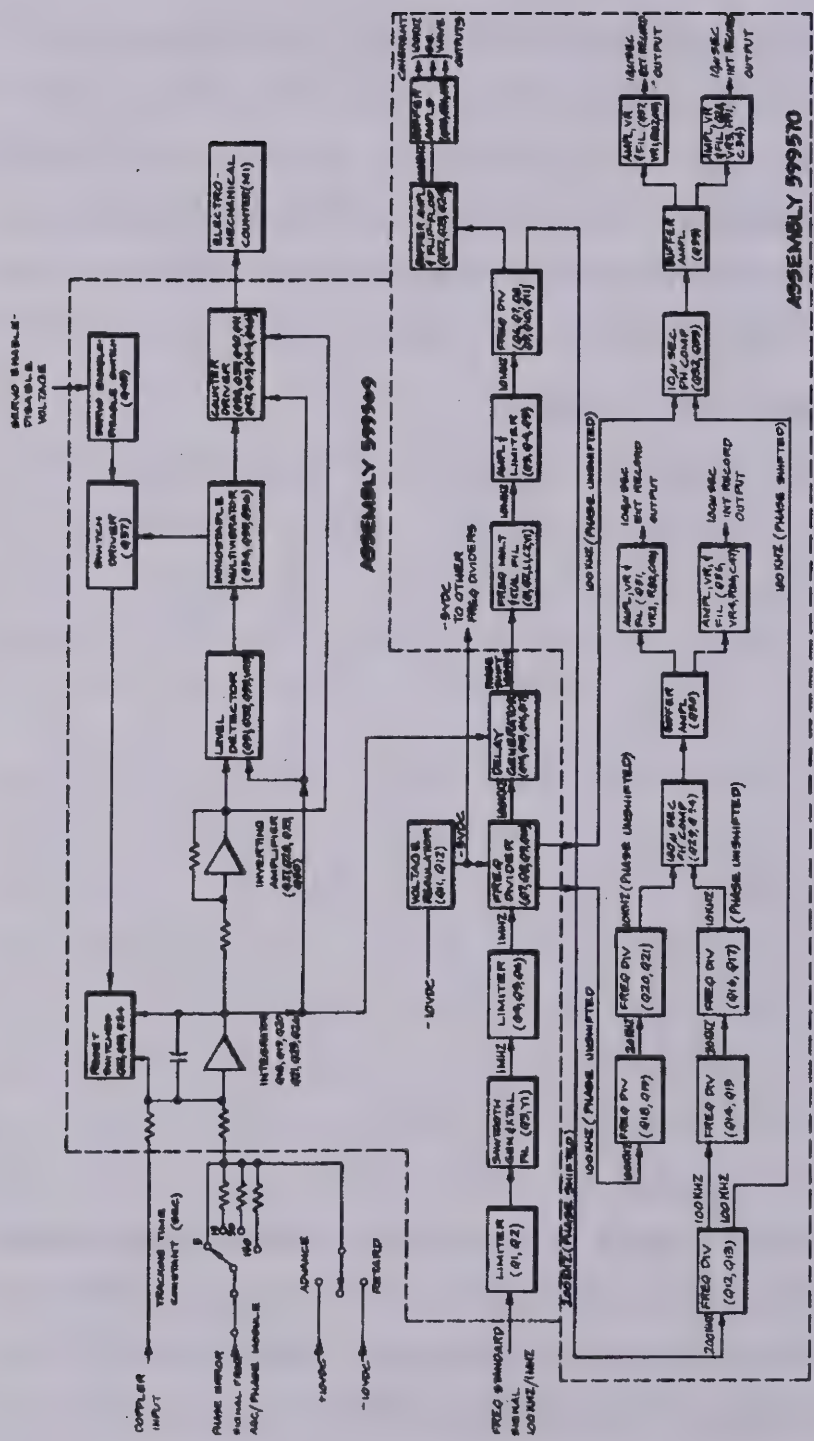

B6-86-8

Figure 5-8. Block Diagram of Phase Servo, Model 599-402

voltage-to-frequency converter because the output of the integrator is a sawtooth signal with a frequency proportional to the magnitude of the error signal.

5-102 As shown in the block diagram, the external frequency standard signal is first limited and then filtered with a crystal filter to produce a 1 MHz signal regardless of whether the input is at 100 kHz or at 1 MHz. The 1 MHz signal is divided to 100 kHz and then delayed a nominal 3 microseconds by a delay generator. The output of the delay generator "rings" a 10 MHz crystal filter, producing a constant-amplitude 10 MHz signal. Control of the generator delay is effected by the output of the integrator. A change of the integrator's output from zero to the resetting threshold voltage changes the delay of the delay generator by 0.1 microsecond, or one cycle of a 10 MHz signal. The output of the crystal filter can "follow" the relatively slow phase changes of the delay generator permitted by the tracking time constants, but it cannot "follow" the rapid change which occurs when the integrator is reset. Because the crystal filter's ringing time is long compared to the integrator's resetting time and the resetting phase change is exactly one cycle, the 10 MHz output of the crystal filter remains unaffected during the integrator reset time. Thus the crystal filter may be thought of as a "flywheel" used to preserve both phase and amplitude of the 10 MHz signal during the integrator reset time.

5-103 The phase-shifted 10 MHz signal is divided to drive a 100 kHz flip-flop which provides 3 coherent 100 kHz square wave outputs.

The divided signal is also used to drive 10 and 100 microsecond full-scale linear phase comparators. The linear phase comparators are binaries which are set by the phase-shifted signal and reset by an unshifted reference signal. Outputs of the binaries are rectangular waves which are filtered to provide dc outputs proportional to the duty cycles of the rectangular waves.

5-104 Unless otherwise noted, reference designators in paragraphs 5-105 through 5-118 refer to schematic diagram 599392 and assembly drawing 599569.

5-105 Integrator: The integrator is an operational amplifier consisting of transistors Q18, Q19, Q20, Q21, Q25 and Q26; input resistors R38 and R39; and feedback capacitors C19 and C20. Transistors Q22, Q23 and Q24 constitute the integrator reset switches. The output of the integrator is inverted by a unity gain operational amplifier consisting of transistors Q27, Q28, Q29 and Q30; input resistor R56; and feedback resistor R63.

5-106 A level detector consisting of Q31, Q32, Q33 and VR5 compares the outputs of the integrator and the inverting amplifier to the threshold voltage (nominally 2.5 vdc) established by VR5 at the base of Q33. If either output exceeds the threshold, Q31 or Q32 conducts to bias Q34 off.

5-107 Transistors Q34, Q35 and Q36 form a monostable multivibrator with an unstable state of approximately 25 milliseconds duration. When the threshold is exceeded and Q34 is biased off, the

collector of Q34 goes negative to turn Q35 off and Q36 on. When Q35 is turned off the miltivibrator is triggered and its output resets the integrator through driver Q37 and resetting transistors Q22, Q23 and Q24. As soon as the reset process is started, the output of the integrator or inverter which had exceeded the resetting threshold drops below the threshold to turn Q31 or Q32 off and Q34 on. When Q34 is turned on, the voltage at the base of Q35 begins rising. After a period of approximately 25 milliseconds (the charging time constant is determined mainly by R76 and C22) Q35 is again turned on, Q36 is turned off and the multivibrator returns to its stable state.

5-108 In normal operation the emitter of Q45 is returned to +10 vdc through R100 to keep Q45 turned off and thus the servo enabled. When it is desired to disable the servo (for instance, when the VLF carrier is off the air), R100 is disconnected from the +10 vdc by the carrier relay in the AGC-Phase module, and the next resetting pulse latches on both Q37 and Q45. The collector current of Q37 keeps the resetting transistors on until the +10 vdc through R100 is restored to turn off Q37 and Q45.

5-109 The emitter current of Q36 is amplified by Q46 and Q43 to drive the electro-mechanical counter M1. Emitter follower Q44 provides -10 vdc for Q43 from the negative unregulated power supply.

5-110 The collector current of Q43 is steered to the count-up or count-down coil of the counter by the binary consisting of Q39 and

Q40 and the differential amplifier consisting of Q41 and Q42. If the output of the integrator is positive, Q42 and Q40 are on and Q41 and Q39 are off. If the output of the inverting amplifier is positive, then Q41 and Q39 are on and Q42 and Q40 are off.

5-111 At the time the integrator is reset, either Q39 or Q40 is on and stays on during the time of the reset pulse to steer the collector of Q43 through the correct coil in the counter. The emitter follower Q38 supplies +10 vdc to Q39 and Q40 from the unregulated positive supply. Resistors R96 and R97 and diodes CR6 and CR7 damp the induced voltage when the current in the counter coils is turned off at the end of the reset pulse.

5-112 Limiter: A limiter consisting of Q1 and Q2 limits the 100 kHz or 1 MHz external frequency standard signal. Positive feedback from the collector of Q1 to the base of Q2 improves switching speed. The square wave collector current of Q2 produces pulses across L1 which turn Q3 on for a few tenths of a microsecond at the frequency of the external standard signal. The voltage across C5 is a sawtooth of the same frequency. The 1 MHz harmonic of the sawtooth is filtered by crystal filter Y1 and limited by Q4, Q5, and Q6 to form 1 MHz pulses.

5-113 Divider: A 5:1 divider consisting of Q7 and Q8 divides the 1 MHz pulses to 200 kHz and a 2:1 divider consisting of Q9 and Q10 divides the 200 kHz pulses to 100 kHz. The 1 MHz pulses from Q6 enter the first divider through R15. Let it be assumed

that initially the complementary transistors Q7 and Q8 are in a non-conducting state and the potential at the emitter of Q8 is slightly more positive that the -5 vdc at the base of Q8. (The nominal -5 vdc supply is provided from the -10 vdc supply by the voltage regulator consisting of Q11 and 12.) Let it be further assumed that at this time a positive input pulse is transmitted through R15 to raise the base potential of Q8 above that of the emitter and thus to cause Q8 to conduct. Q8 collector current then flows through L4 and R17, biasing Q7 for conduction, and Q7 collector current begins to flow. The Q7 collector current reinforces the initial triggering current in the base of Q8. By virtue of this regenerative action, Q7 saturates, essentially connecting the base of Q8 to ground through Q7. For approximately a microsecond, Q7 and Q8 continue to conduct, the collector of one supplying current to the base of the other. (This pulse, transmitted through R18, serves as an input pulse to the next divider.)

5-114 Collector current for Q8 is obtained chiefly from the charge stored on C11. When Q8 conducts, C11 discharges rapidly, taking the emitter of Q8 toward ground. By the time C11 has discharged to approximately 0.7 volts, the rate of change of charge on the condenser has dropped greatly, and the Q8 collector current is therefore considerably reduced and approaching a steady state. As the Q8 collector current approaches a steady state, the induced voltage across L4 falls to a value less than that required to keep Q7 conducting and the transistor cuts off. When Q7 cuts off,

the base of Q8 returns to the -5 vdc supply voltage and Q8 cuts off.

5-115 When Q8 cuts off, the "timing" part of the cycle begins. C11 is in a discharged state and the emitter of Q8 is very nearly at ground potential. Because Q7 is cut off, the base of Q8 is at -5 vdc. C11 now begins to charge through R20 and the emitter potential of Q8 approaches that of the base. Because of the high initial Q8 emitter potential, the first four (in this case) input pulses reaching the base of Q8 cannot cause the transistor to conduct and are effectively ignored. By the time of the fifth pulse, however, the Q8 emitter potential has been reduced by the charging of C11 to a value only slightly more positive than that of the emitter, thereby triggering conduction in Q8 and beginning the next cycle. (Triggering in this case on the fifth rather than the fourth, sixth, or another pulse is determined by the RC time constant of C11 and R20.)

5-116 The 200 kHz pulses from the collector of Q7 are fed through R18 to the next divider consisting of Q9 and Q10. The sequence of events is the same as described for Q7 and Q8 except that in the Q9 and Q10 divider circuit the time constant (Q12 and R23) has been chosen so that only one pulse is ignored during the charging process and thus the division is by two rather than by five.

5-117 A delay generator consisting of Q14, Q15, Q16 and Q17 is triggered by the negative 100 kc pulses from the collector of Q10.

that initially the complementary transistors Q7 and Q8 are in a non-conducting state and the potential at the emitter of Q8 is slightly more positive that the -5 vdc at the base of Q8. (The nominal -5 vdc supply is provided from the -10 vdc supply by the voltage regulator consisting of Q11 and 12.) Let it be further assumed that at this time a positive input pulse is transmitted through R15 to raise the base potential of Q8 above that of the emitter and thus to cause Q8 to conduct. Q8 collector current then flows through L4 and R17, biasing Q7 for conduction, and Q7 collector current begins to flow. The Q7 collector current reinforces the initial triggering current in the base of Q8. By virtue of this regenerative action, Q7 saturates, essentially connecting the base of Q8 to ground through Q7. For approximately a microsecond, Q7 and Q8 continue to conduct, the collector of one supplying current to the base of the other. (This pulse, transmitted through R18, serves as an input pulse to the next divider.)

5-114 Collector current for Q8 is obtained chiefly from the charge stored on C11. When Q8 conducts, C11 discharges rapidly, taking the emitter of Q8 toward ground. By the time C11 has discharged to approximately 0.7 volts, the rate of change of charge on the condenser has dropped greatly, and the Q8 collector current is therefore considerably reduced and approaching a steady state. As the Q8 collector current approaches a steady state, the induced voltage across L4 falls to a value less than that required to keep Q7 conducting and the transistor cuts off. When Q7 cuts off,

the base of Q8 returns to the -5 vdc supply voltage and Q8 cuts off.

5-115 When Q8 cuts off, the "timing" part of the cycle begins. C11 is in a discharged state and the emitter of Q8 is very nearly at ground potential. Because Q7 is cut off, the base of Q8 is at -5 vdc. C11 now begins to charge through R20 and the emitter potential of Q8 approaches that of the base. Because of the high initial Q8 emitter potential, the first four (in this case) input pulses reaching the base of Q8 cannot cause the transistor to conduct and are effectively ignored. By the time of the fifth pulse, however, the Q8 emitter potential has been reduced by the charging of C11 to a value only slightly more positive than that of the emitter, thereby triggering conduction in Q8 and beginning the next cycle. (Triggering in this case on the fifth rather than the fourth, sixth, or another pulse is determined by the RC time constant of C11 and R20.)

5-116 The 200 kHz pulses from the collector of Q7 are fed through R18 to the next divider consisting of Q9 and Q10. The sequence of events is the same as described for Q7 and Q8 except that in the Q9 and Q10 divider circuit the time constant (Q12 and R23) has been chosen so that only one pulse is ignored during the charging process and thus the division is by two rather than by five.

5-117 A delay generator consisting of Q14, Q15, Q16 and Q17 is triggered by the negative 100 kc pulses from the collector of Q10.

The delay generator is a monostable multivibrator which delays the pulses approximately three microseconds. In the multivibrator's normal state Q15 is off and Q17 is on. The negative-going pulse from the collector of Q10 turns Q15 on the resulting positive step at the collector of Q15 coupled through C15 to the base of Q17 turns Q17 off. Q17 remains off until C15 discharges enough to turn it back on. A constant current source, Q16, is used to discharge the capacitor. The emitter current of Q14, and thus the current through VR1, is controlled by the output of the integrator which is attenuated by R103, R85 and R37. Because of the clamping action of this controlled current on the voltage at the collector of Q15, the multivibrator delay is varied by the integrator output. The control is such that the change in delay is 0.1 microsecond as the integrator output changes from zero to the threshold level discussed earlier. R103 provides the adjustment to achieve the exact desired delay. The output of the delay generator at the collector of Q17 is thus a negative-going, variable-width pulse approximately three microseconds long with a frequency of 100 kHz.

5-118 Phase Comparator and Phase Shifters: Unless otherwise noted, reference designators in paragraphs 5-120 through 5-125 refer to schematic diagram 599396 and assembly drawing 599570.

5-119 The negative-going pulse from the delay generator turns on Q1 which charges L1. When the pulse decays, Q1 is turned off rapidly and L1 and C2 "ring" at approximately 10 MHz. The damped 10 Mhz oscillation is isolated by Q2, filtered by Y1 and then

amplified and limited by Q3, Q4 and Q5 to produce 10 MHz pulses.

5-120 Pulse-type dividers similar to the one described in paragraphs 5-114 through 5-118 divide the 10 MHz pulses down to 10 kHz. Divider transistor pairs Q6 and Q7, Q8 and Q9, Q10 and Q11, Q12 and Q13, Q14 and Q15, and Q16 and Q17 divide the 10 MHz pulses, respectively, to 5 MHz, 1 MHz, 200 kHz, 100 kHz, 20 kHz, and 10 kHz.

5-121 The 200 kHz negative pulse at the collector is fed to the buffer amplifier Q22 which in turn drives the flip-flop consisting of Q23 and Q24. The 100 kHz square wave from the flip-flop provides three isolated coherent 100 kHz square wave outputs. Buffer amplifiers Q25, Q26 and Q27 provide the isolation.

5-122 One of the unshifted 100 kHz pulse signals from Assembly 599569 is divided to 20 kHz by Q18 and Q19 and to 10 kHz by Q20 and Q21. The 10 kHz negative pulses from the collector of Q21 are then phase-compared with the shifted 10 kHz negative pulses from the collector of Q17. Comparison is made with a binary consisting of Q29 and Q34. Because one input sets the binary and the other resets it, the resulting output of the binary is a rectangular 10 kHz waveform whose duty cycle is proportional to the phase difference between the two inputs. As the phase of one with respect to the other varies from zero to 360 degrees (or in this case the time difference from zero to 100 microseconds) the duty cycle varies from zero to 100 percent. The phase comparator output at the

collector of Q29 drives the buffer amplifier Q30 which in turn drives the external record and internal record output amplifiers, Q31 and Q36, respectively. Filters consisting of R82 and C46 and of R86 and C47 provide dc output voltages which are proportional to the phase shift and which provide full-scale ranges of 100 microseconds. Voltages regulators VR2 and VR4 clamp the collectors during off times to ensure linearity of the dc output versus phase shift.

5-123 The other unshifted 100 kHz pulse signals from Assembly 599569 goes to the phase comparator consisting of Q32 and Q33 to be compared with the shifted 100 kHz pulses from the collector of Q13. The collector of Q32 provides the rectangular waveform output which drives the buffer amplifier Q35. Q35 in turn drives the external and internal record amplifiers Q37 and Q28. Filtering is accomplished with R101 and C45 and with R91 and C34 to provide dc output voltages proportional to the phase shift. In this case full-scale ranges of 10 microseconds are provided. Output linearity is ensured by voltage regulators VR1 and VR2.

5-124 It will be noted on the schematic diagram that an alternate connection is provided for C35 and C38 such that it is possible to provide 50 microsecond full-scale ranges in lieu of the 10 microsecond ranges. However, the 10 microsecond range is considered the normal configuration and accordingly the block diagram shows this configuration.

5-125 Power Supply (Model 599-502)

5-126 Transformer, Rectifier and Filter: As shown in Figure 5-9 and schematic diagram 599726, line power is supplied through transformer T1. The voltage at the secondary of T1 is rectified by diodes CR3, CR4, CR5 and CR6 and filtered by capacitors C6 and C7 to provide unregulated positive and negative supply voltages.

5-127 Regulator: Two separate regulator circuits provide regulated positive and negative supply voltages. Voltage regulator diodes VR1 and VR2 in series establish a reference voltage for the regulated +10 volts and R3 provides a vernier adjustment of the regulated positive supply voltage.

5-128 The difference (error) between the reference voltage and the regulated positive voltage is amplified by the differential amplifier transistors, Q3 and Q4. The amplified error drives the emitter follower, Q8, which in turn controls the drop across the series regulator, Q2, to reduce the error.

5-129 The negative regulated supply voltage is obtained in the same way except that in this case the regulated positive voltage supplies the reference by means of a voltage divider consisting of R7 and R8.

5-130 Standby Supply Holdoff Diodes: In normal line operation the unregulated supply voltages exceed the standby supply voltages and the holdoff diodes CR7 and CR8 are biased to cut-off. Transistor Q7 is also biased to cut-off to keep the STANDBY indicator, DS2,

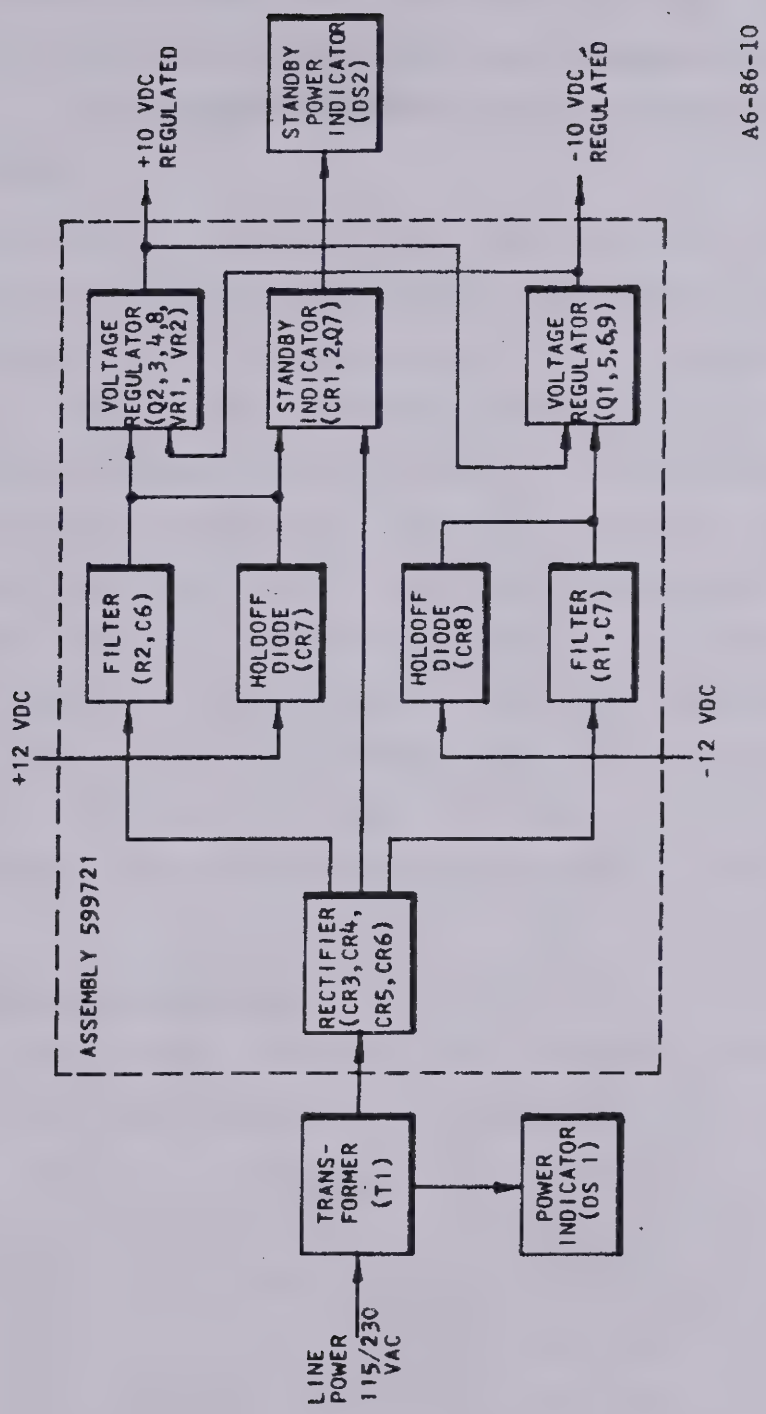

Figure 5-9. Block Diagram of Power Supply, Series 599-502

Instrument	Recommended Type
(2) Probe	10:1 attenuation, Tektronix Model P6000, or equivalent.
(3) Volt-Ohmmeter (VOM)	Simpson Model 260, or equivalent.
(4) Two 24 terminal jumper cables	Supplied with the Model 599J
(5) 22 pin PC board extender	Supplied with the Model 599J
(6) Wave Analyzer	Hewlett-Packard Model 302A, or equivalent.
(7) Counter	Hewlett-Packard Model 5233L or equivalent.
(8) Coherent signal source	Stable source of 20 kHz (derived from local frequency standard) capable of 10 mv rms into 50 ohms.
(9) AC voltmeter	Hewlett-Packard Model 400D, or equivalent.
(10a) Attenuator	Hewlett-Packard Model 355D or equivalent.
(10b) Attenuator	Hewlett-Packard Model 355D or equivalent.
(11) Oscillator	Hewlett-Packard Model 200CD or equivalent.
(12) Test Set	As shown in Fig. 6-1

6-5 ADJUSTMENT PROCEDURES

6-6 As mentioned in paragraph 6-2, certain compensating adjustments will be necessary upon the replacement of components in several areas of the Model 599J. It is recommended that the procedures below be followed to the point of determining whether

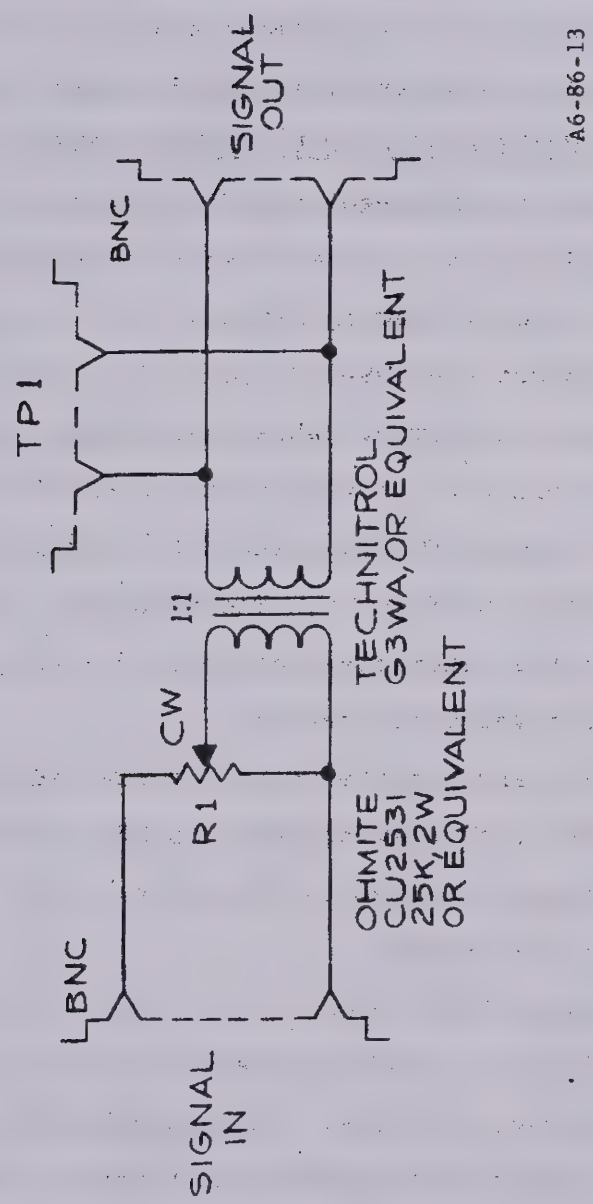

Figure 6-1. Test Set 1

or not an adjustment is actually necessary. If it is found that the affected section is operating within any tolerance that might be specified, no adjustment should be attempted. Only in the case of an actual fault is readjustment recommended.

6-7 POWER SUPPLY REGULATED DC VOLTAGE LEVEL

6-8 The level of the regulated dc voltage in the Power Supply should be adjusted as follows (refer to schematic diagram 599726 and assembly drawing 599721):

(1) Connect the 599-502 module into J5 by means of a 24 terminal jumper cable. All other modules should be in place to provide normal operating load.

(2) Connect a VOM to point P (+) and point G.

(3) Switch LINE to ON. The LINE pilot lamp should light. If the meter does not read +9.8 vdc, adjust R3 for a +9.8 vdc meter reading.

(4) If standby batteries are connected, switch STANDBY to READY, then switch LINE to OFF. STANDBY lamp should light when LINE is OFF and no change should be noticed in VOM reading.

(5) Switch LINE to ON.

(6) Disconnect VOM "+" lead (switch meter to -vdc function or reverse leads) and reconnect between points N and G. The meter reading must not be more negative than -10 vdc.

(7) If standby batteries are connected, repeat step (4).

6-9 PHASE ERROR DC AMPLIFIER

6-10 The balance of the phase error channel dc amplifier should be set as follows:

(1) Disconnect antenna cable and set GAIN to zero.

(2) Switch LINE to ON and wait 30 seconds.

(3) If Phase Error Meter does not read zero, adjust the BALANCE control on the 599-303 module front panel so that the meter does read zero.

6-11 AGC DC AMPLIFIER

6-12 The balance of the AGC channel dc amplifier is set as follows:

(1) Connect the 599-303 module into J3 by means of a 24 terminal jumper cable.

(2) Disconnect one end of R11 on Assembly 599799.

(3) Disconnect antenna cable and set GAIN to zero.

(4) Switch LINE to ON and wait 30 seconds.

(5) Connect a VOM between terminals DD and T on Assembly 599799. Adjust R14 so that the meter reading is less than 0.1 vdc.

(6) Switch LINE to OFF and reconnect R11 into the circuit. Cover the adjustment screw of R14 with inspection dope.

6-13 DELAY GENERATOR ADJUSTMENT

6-14 The phase servo delay generator located on Assembly 599569 (see schematic diagram 599392) is adjusted as follows:

(1) Connect the 599-402 module to J4 by means of a 24

terminal jumper cable.

(2) Connect an oscilloscope to the collector of Q5 on Assembly 599570. Trigger the oscilloscope with 100 kHz from the local frequency standard.

(3) In the 599-303 module, connect the collector of Q14 on Assembly 599799 to ground.

(4) Switch LINE to ON.

(5) Set SERVO TIME CONSTANT switch to 15 seconds and unbalance the phase error dc amplifier (see (3), paragraph 6-10) so that the servo has a rate of about 0.1 microseconds per second.

(6) Adjust R103 on Assembly 599569 for minimal lurching of the 10 MHz whenever the MICROSECONDS counter changes.

(7) Rebalance phase error dc amplifier referring to paragraph 6-10.

6-15 1.0 MHz Crystal Filter

6-16 Adjustment of the 1.0 MHz crystal filter located on Assembly 599570 (see schematic diagram 599396) is performed as follows:

(1) Connect the 599-402 module into J4 with 24 terminal jumper cable.

(2) Connect an oscilloscope to the base of Q3 (Assembly 599570).

(3) Switch LINE to ON.

(4) Adjust L1 and C3 for maximum 10 MHz on the base of Q3.

6-17 Frequency Divider

6-18 Adjustment of the 10:1 frequency divider on assemblies 599569 and 599570 (see schematic diagrams 599392 and 599396, respectively) is performed as follows:

(1) Connect the 599-402 module into J4 with a 24 terminal jumper cable.

(2) Switch LINE to ON.

(3) Connect an oscilloscope to the base of Q21 on Assembly 599570. Adjust R26 so that the waveform has a period of 100 microseconds. First turn R26 clockwise until the period changes. Then, while counting turns, adjust R26 counterclockwise until the period changes again. Then set R26 clockwise one half the number of turns.

(4) Connect the oscilloscope to the base of Q8 on Assembly 599570.

(5) Adjust R20 so that the waveform has a period of 1.00 microsecond. First turn R20 clockwise until the period changes. Then, while counting turns, adjust R20 counterwise until the period again changes. Set R20 clockwise one half the number of turns.

6-19 Tracking Threshold Adjustment

6-20 To adjust the tracking threshold, perform the following steps:

(1) Connect the 599-303 module to J3 with a 24-terminal jumper cable.

(2) Connect a stable 20 kHz, 0.1 microvolt signal to the antenna input. To avoid ground loops, use Test Set 1 for this connection.

(3) Adjust the receiver's front-panel GAIN control to its extreme CW position.

(4) Allow receiver to acquire, track and reach equilibrium.

(5) Reduce the input signal to 0.01 microvolt and adjust R20 on Assembly 599799 in the 599-303 module so that the carrier relay just holds in when equilibrium is reached.

6-21 Phase Detector/VCO Bias Adjustment

6-22 The following steps should be performed to adjust the Phase Detector/VCO bias:

(1) Connect the 599-204 module to J1 and J2 with two 24-terminal jumper cables.

(2) Place the Phase Detector/VCO, Assembly 599736, on a PCB extender.

(3) Tune the receiver to 50.00 kHz.

(4) Connect a counter to monitor the coherent 100 Hz output on the back of the receiver.

(5) Adjust R68 on Assembly 599736 so that the counter displays 100 Hz.

(6) Slowly adjust R68 CW until the display changes from 100 Hz and record the DC voltage at terminal N of the assembly's connector.

(7) Slowly adjust R68 CCW until the display changes from 100 Hz and record the dc voltage at terminal N.

(8) Adjust R68 so that the voltage at terminal N is the average of steps (6) and (7).

6-23 VCO Natural Frequency Adjustment

6-24 To adjust the natural frequency of the VCO, the following steps should be followed:

(1) Perform steps (1), (2) and (3) of paragraph 6-22.

(2) Remove the shield from Assembly 599736 to permit the adjustment of C13 and C16. (CAUTION! Shield is at +5 volts dc with respect to ground.)

(3) With the oscilloscope probe connected to the collector of Q12, adjust C13 and/or C16 for a voltage of +4.9 ± 0.1 volts dc.

6-25 Adjustment For Minimum Phase Modulation

6-26 The adjustment for minimum phase modulation should proceed as follows:

(1) Connect the 599-204 module to J1 and J2 with two 24-terminal jumper cables.

(2) Remove the 599-303 module.

(3) Adjust the GAIN control to approximately 60 db.

(4) Connect the variable oscillator to the antenna input. Use Test Set 1 for this connection.

(5) Connect the wave analyzer to the IF MONITOR output.

(6) Tune the receiver to 99.00 kHz with the LOC OSC switch

in the +1 kHz position.

(7) Place the Phase Detector/VCO, Assembly 599736, on a PCB extender.

(8) Tune the oscillator to 99.000 ± .005 kHz and adjust amplitude for 5 millivolts at 1.0 kHz at the IF MONITOR output.

(9) Tune the receiver to 99.20 kHz and adjust R48 on Assembly 599736 for a minimum analyzer reading, increasing the oscillator amplitude for a convenient analyzer reading without changing scales.

6-27 Adjustment For RF Phase Splitter Balance

6-28 To balance the RF phase splitter, perform the following steps:

(1) Perform steps (1) through(5) of paragraph 6-26.

(2) Tune the receiver to 10.00 kHz with the LOC OSC switch in the +1 kHz position.

(3) Place the RF Preamp, Assembly 599745, on a PCB extender.

(4) Tune the oscillator to 10.000 ± .005 kHz and adjust the amplitude for 5 millivolts at 1.0 kHz at the IF MONITOR output.

(5) Tune the oscillator to 21.000 ± .005 kHz and adjust R31 on Assembly 599745 for a minimum analyzer reading, increasing the oscillator amplitude for a convenient analyzer reading without changing scales.

6-29 Adjustment For Third Harmonic Balance

6-30 The following procedure should be followed to adjust for third harmonic balance:

(1) Perform steps (1) through (5) of paragraph 6-26.

(2) Tune the receiver to 10.00 kHz with the LOC OSC switch in the +1 kHz position.

(3) Place the Sequencer/Dual Modulator, Assembly 599747, on a PCB extender.

(4) Tune the oscillator to 10.000 ± .005 kHz and adjust the amplitude for 5 millivolts at one kHz at the IF MONITOR output.

(5) Tune the oscillator to 34.000 ± .005 kHz and adjust R1 and R29 on Assembly 599747 by trial and error for a minimum analyzer reading, increasing the oscillator amplitude for a convenient analyzer reading without changing scales.

6-31 Image Rejection Adjustment

6-32 To adjust for maximum image rejection, perform the following steps:

(1) Perform steps (1) through (5) of paragraph 6-26.

(2) Tune the receiver to 25.00 kHz with the LOC OSC switch in the +1 kHz position.

(3) Place the IF Amplifier, Assembly 599746, on a PCB extender.

(4) Tune the oscillator to 25.000 ± .005 kHz and adjust

the amplitude for 5 millivolts at one kHz at the IF MONITOR output.

(5) Tune the oscillator to 27.0000 ± .0001 kHz and adjust R1 and R2 on Assembly 599746 by trial and error for a minimum analyzer reading, increasing the oscillator amplitude for a convenient analyzer reading without changing scales.

6-33 RF Preamp Gain Adjustment

6-34 To adjust the RF Preamp gain, the following steps should be performed:

(1) Connect the 599-204 module to J1 and J2 with two 24-terminal jumper cables.

(2) Place the RF Preamp, Assembly 9748, on a PCB extender.

(3) Connect a stable 20 kHz, one microvolt signal to the antenna input.

(4) Remove the 599-303 module.

(5) Adjust the GAIN control to its extreme CW position.

(6) Adjust R20 on Assembly 9748 for a wave analyzer reading of 0.30 volt at one kHz at the IF MONITOR output.

6-35 Audio Remodulator Frequency Adjustment

6-36 Perform the following steps to adjust the audio remodulator frequency:

(1) Connect the 599-204 module to J1 and J2 with two

24-terminal jumper cables.

(2) Place the (optional) Audio Amplifier, Assembly 599800, on a PCB extender.

(3) With a counter connected to measure frequency at the collector of Q7 on Assembly 599800, adjust R19 on this assembly for a frequency of 1150 ± 50 Hz.

6-37 TROUBLESHOOTING

6-38 Before attempting to troubleshoot the Model 599J, the operator should become thoroughly familiar with Sections IV and V of this manual. Understanding of the block diagrams of Section V is essential. The purpose of this section is to facilitate the isolation of a particular trouble to a particular module and thence to a particular assembly and circuit. When the trouble area has been located, the circuit descriptions in Section V should be consulted. Waveforms for the various test points are found in section 6-40. Table 6-2 lists trouble symptoms and their most probable causes. When a symptom states "no signal," this can mean no signal at all, distorted signal, or signal of incorrect frequency.

6-39 Before using the troubleshooting table (6-2) the following conditions should be observed:

(1) Tune for a station known to be broadcasting.

(2) Set GAIN to mid-range and VOLUME fully CW.

(3) Set BLANKING level fully CCW.

(4) Allow three minutes warm up time.

TABLE 6-2 TROUBLESHOOTING CHART

TROUBLE	PROBABLE TROUBLE LOCATION
LINE power light off	LINE indicator lamp LINE fuses 115/230 vac switch Series regulator transistor on connector panel assembly Power Supply, Model 599-502
No STANDBY operation	External standby power supply STANDBY fuses Standby power circuit in Power Supply, Model 599-502
No COHERENT 100 kHz output	Local Frequency standard Phase Servo, Model 599-402
No COHERENT 1 kHz, 100 Hz, or LO output; or SYNC light flashes or glows continuously	The following assemblies in the Receiver, Model 599-204: Reference Divider, Assy 599735 Phase Detector/VCO, Assy 599736 1st Decade, Assy 599737 2nd and 3rd Decade, Assy 599738
No SYNC light when receiver is tuned	SYNC lamp Phase Detector/VCO, Assy 599736, in Receiver, Model 599-204
No audio loudspeaker output when IF MONITOR output is present (when audio loudspeaker option is installed)	Loudspeaker Audio Amplifier, Assy 599800, in Receiver, Model 599-204
No PHONE output when IF MONITOR output is present	IF Amplifier, Assy 599746, in Receiver, Model 599-204
No IF MONITOR output	The following assemblies in the Receiver, Model 599-204: RF Preamp, Assy 9748 IF Amplifier, Assy 599746 Sequencer/Dual Modulator, Assy 599747

TABLE 6-2 TROUBLESHOOTING CHART (Cont.)

TROUBLE	PROBABLE TROUBLE LOCATION
SFERICS lamp does not glow but receiver is blanked when BLANKING control is in extreme CW position	SFERICS lamp SFERICS lamp driver, Phase Error Channel, Assy 599829, in AGC-Phase, Model 599-303
SFERICS lamp does not glow and receiver is not blanked when BLANKING control is in extreme CW position	RF Preamp, Assy 9748, in Receiver, Model 599-204
SFERICS lamp glows continuously but receiver is not blanked.	SFERICS lamp driver in Phase Channel, Assy 599829, in AGC-Phase, Model 599-303
MICROSECONDS counter does not operate	Counter Counter drive circuits in Assy 599569, Phase Servo, Model 599-402
PHASE ERROR meter cannot be adjusted to zero with BALANCE control when antenna is disconnected	Phase Error Channel, Assy 599829, in AGC-Phase, Model 599-303
CARRIER lamp does not extinguish when CARRIER LEVEL is above -20 db, or CARRIER LEVEL meter does not deflect full CW when receiver is initially turned on	Carrier relay or carrier relay drive (Carrier channel, Assy 599799) in AGC-Phase, Model 599-303
CARRIER lamp does not come on when antenna is disconnected	CARRIER lamp Carrier relay or carrier relay drive as above

TABLE 6-2 TROUBLESHOOTING CHART (Cont.)

TROUBLE	PROBABLE TROUBLE LOCATION
No CARRIER LEVEL indicator when audio or IF MONITOR indicates station is being received	Station is employing frequency or phase shift keying Carrier Channel Assy 599799, in AGC-Phase, Model 599-303
PHASE ERROR meter does not indicate phase error when the presence of carrier is otherwise indicated	Phase Channel, Assy 599829, in AGC-Phase, Model 599-303
Servo runs continuously with a large phase error or loses track	Local frequency standard has excessive fractional frequency offset
External phase record outputs do not change when MICROSECONDS counter operates	Phase comparator circuits in Assy 599570 in Phase Servo, Model 599-402
No RF LIMIT light when at least 100 millivolts rms is applied at antenna input	RF LIMIT lamp RF Preamp, Assy 9748, in Receiver, Model 599-204

6-40 WAVEFORMS

6-41 Figure 6-2 contains many important waveforms for troubleshooting. Each waveform is keyed to a row of information in Table 6-3. With certain exceptions (noted in the "Remarks" column of Table 6-3) the following general conditions were observed in obtaining the waveforms of Figure 6-2:

(1) Receiver tuned to: 20.00 kHz

(2) LOC OSC switch set to: +1 kHz

(3) Frequency standard input: 100 kHz

(4) Oscilloscope trigger: External coherent source

6-42 The following specific system conditions apply to plates 5 and 6 in Figure 6-2D and all plates in Figures 6-2E and 6-2F:

(1) CARRIER LEVEL: 0 db

(2) GAIN: 40 db

6-43 All but 6 plates in Figure 6-2 show two waveforms. The information in the Test Point column of Table 6-3 should therefore be interpreted as follows:

(1) The upper waveform is that of the first test point listed beside a given plate number.

(2) The lower waveform is that of the second test point listed beside a given plate number.

It is clear that in many instances, the last three columns of Table 6-3 contain information common to several plates. It should also be clear that each section (A, B, etc.) of Figure 6-2 is related to a corresponding section of Table 6-3, i.e. Table 6-3A, 6-3B, etc.

TABLE 6-3A ASSEMBLY 599735 WAVEFORMS

Plate Number	Test Point	Scale Factors		Remarks
		Vert., v/div	Horizontal	
1	P1, Pin L Emitter Q22	2	5 μsec/div	÷ 1
2	Emitter Q22 Emitter Q20		20 μsec/div	÷ 5
3	Emitter Q20 Emitter Q18		0.1 μsec/div	÷ 5
4	Emitter Q16 Emitter Q14			÷ 2
5	P1, Pin F P1, Pin B	10	0.5 μsec/div	∠ 0° ∠ 90°
6	P1, Pin W P1, Pin Z	5	2 msec/div	

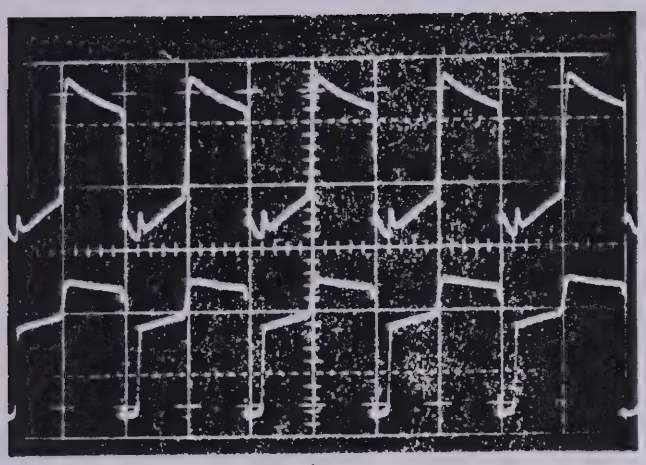

1

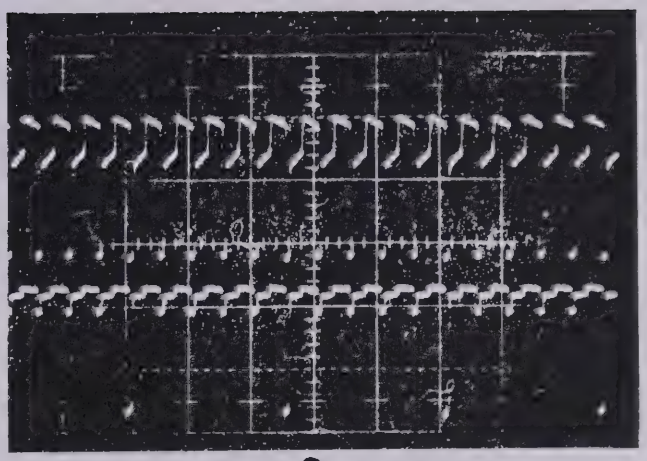

2

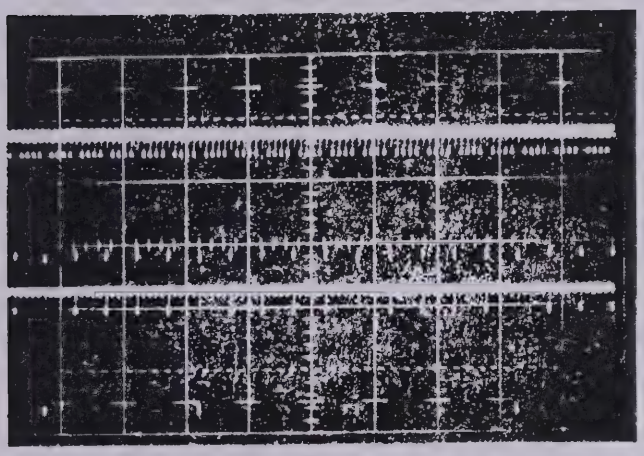

3

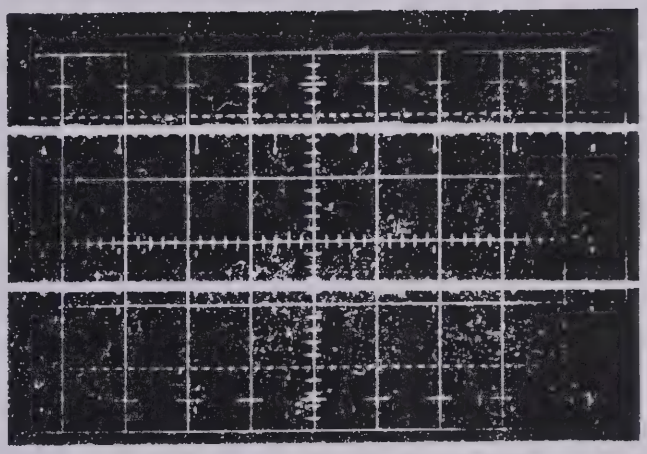

4

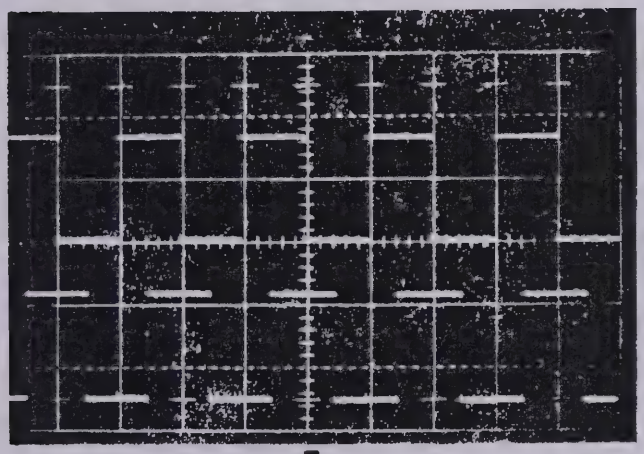

5

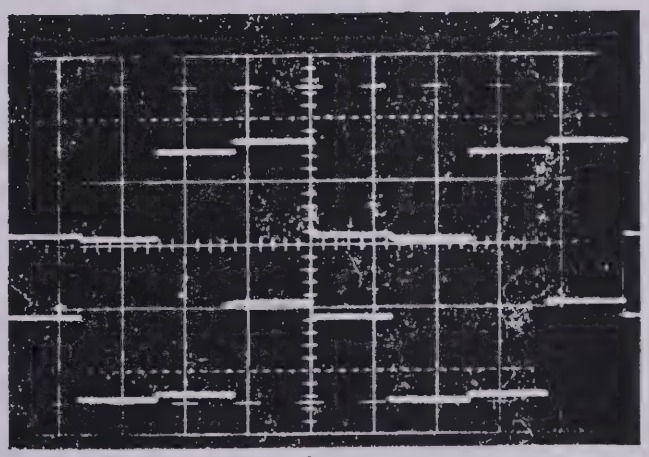

6

FIGURE 6-2A ASSEMBLY 599735 WAVEFORMS

TABLE 6-3B ASSEMBLY 599737 WAVEFORMS

Plate Number	Test Point	Scale Factors		Remarks
		Vert., v/div	Horizontal	
1	P3, Pin Z Collector Q3	5 2	50 µsec/div	
2	Collector Q6 Collector Q3	5	5 µsec/div	
3	Collector Q10 Collector Q3	5 2	50 µsec/div	
4	Collector Q13 Collector Q3	5 2		
5	Collector Q16 Collector Q3	5 2		
6	Collector Q24	1	0.2 µsec/div	Internal trigger
7	Cathode CR3 Cathode CR2	5	50 µsec/div	
8	Cathode CR6 Cathode CR5			

(Cont.) TABLE 6-3B ASSEMBLY 599737 WAVEFORMS

Plate Number	Test Point	Scale Factors		Remarks
		Vert., v/div	Horizontal	
9	Cathode CR9 Cathode CR8	5	50 μsec/div	
10	Cathode CR12 Cathode CR11			

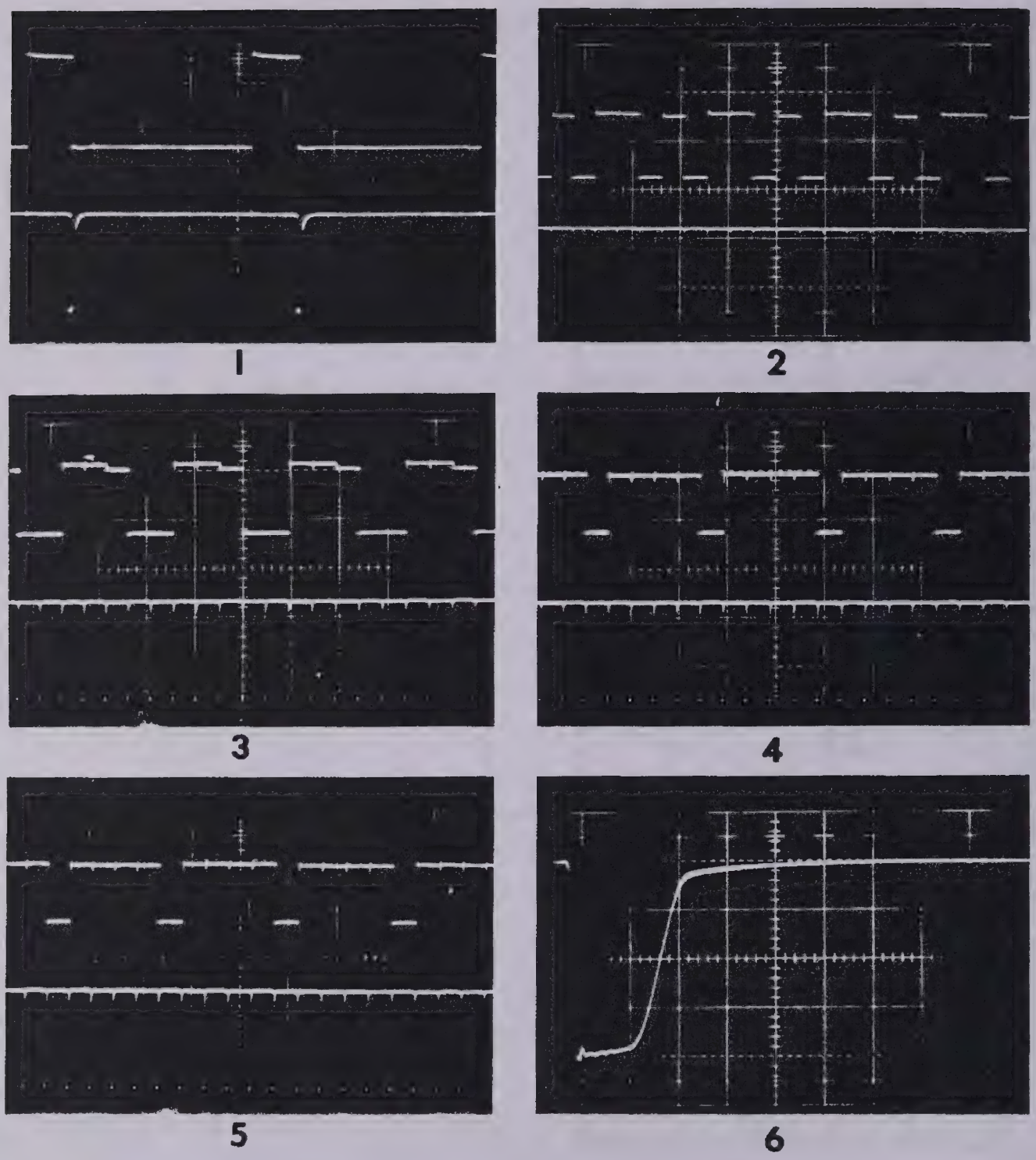

FIGURE 6-2B ASSEMBLY 599737 WAVEFORMS

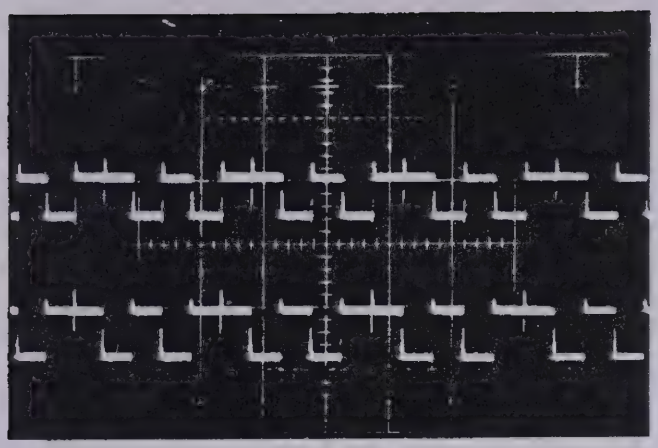

7

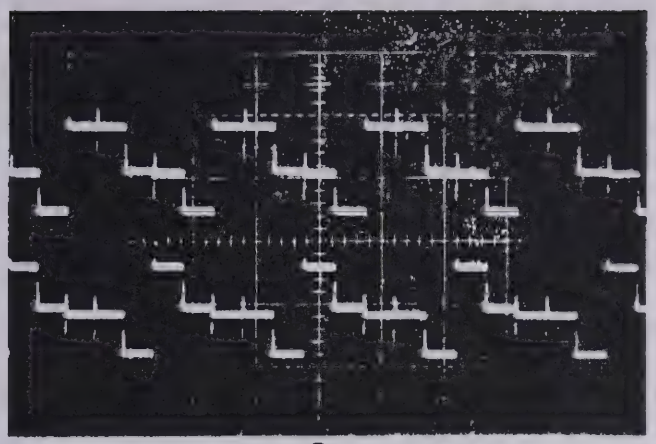

8

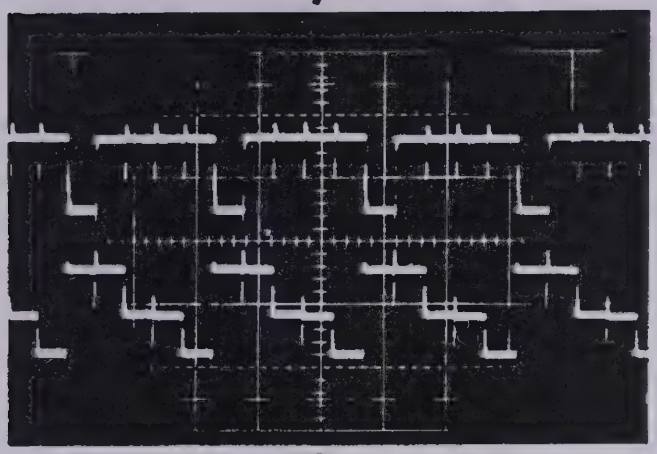

9

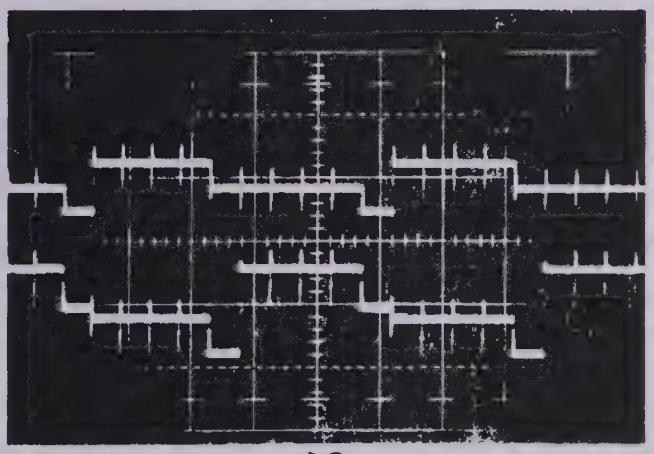

10

FIGURE 6-2B (cont.)

TABLE 6-3C ASSEMBLY 599736 WAVEFORMS

Plate Number	Test Point	Scale Factors		Remarks
		Vert., v/div	Horizontal	
1	P4, Pin K	1	1 μsec/div	
2	Collector Q6 P4, Pin S	5	5 μsec/div	
3	Collector Q6 P4, Pin S		2 msec/div	
4	P4, Pin S Emitters Q8, Q9	5 2	5 μsec/div	Compensate for scope input Z with equal R between emitters and +10 vdc.

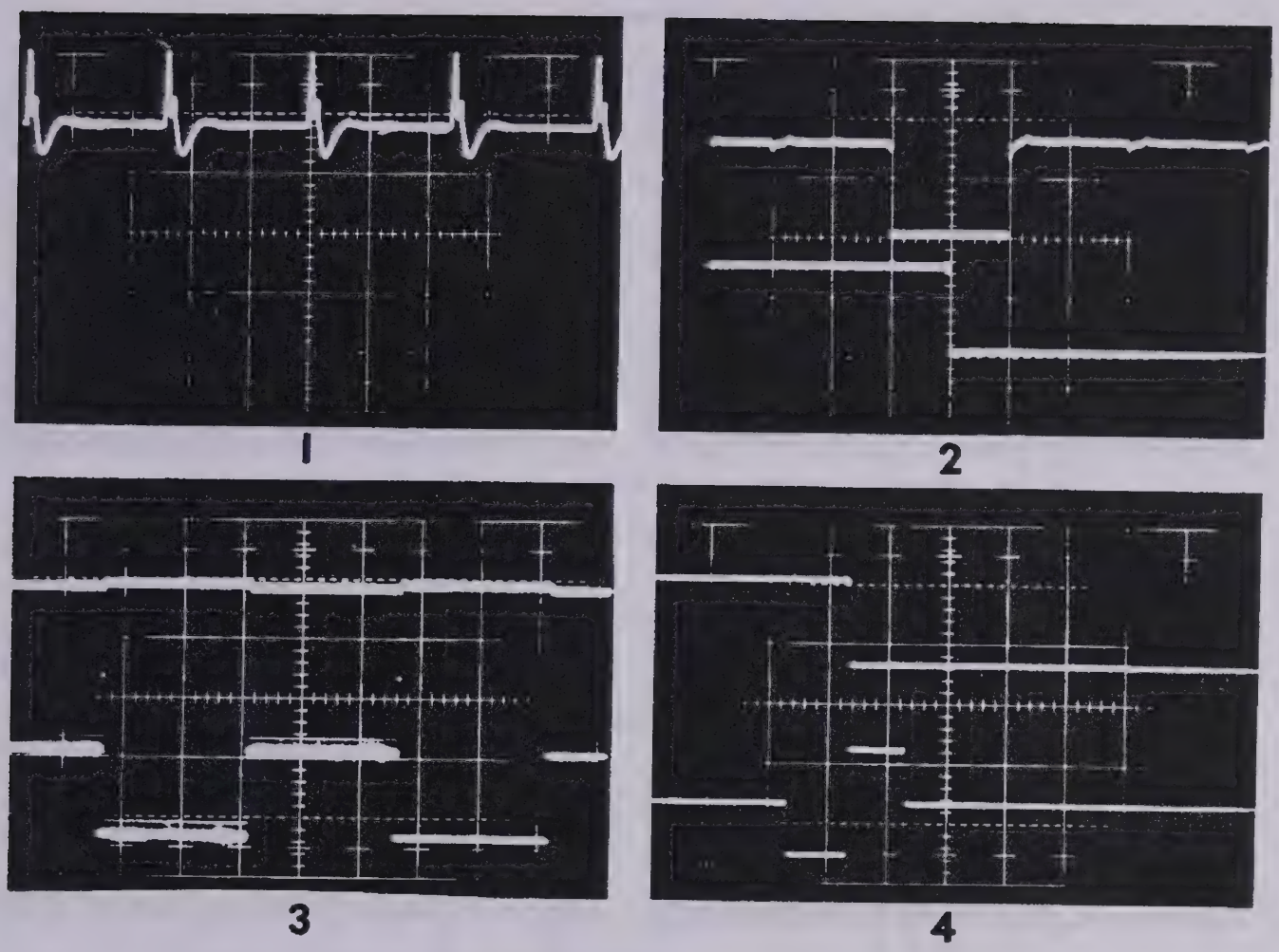

FIGURE 6-2C ASSEMBLY 599736 WAVEFORMS

TABLE 6-3D ASSEMBLY 599746 WAVEFORMS

Plate Number	Test Point	Scale Factors		Remarks
		Vert., v/div	Horizontal	
1	Collector Q3 Collector Q7	0.05	1 msec/div	Coherent 20 kHz to ANTENNA
2	Collector Q11 Collector Q15			AGC-PHASE module disconnected
3	Collector Q19 Collector Q23	0.2 0.5		
4	IF MONITOR Collector Q27	1		GAIN: 2 v p-p at IF MONITOR
5*	IF MONITOR Collector Q27	0.05		AGC-PHASE module connected
6*	Collector Q34 P6, Pin S	2 5	5 μsec/div	Trigger with lower waveform

* See paragraph 6-42.

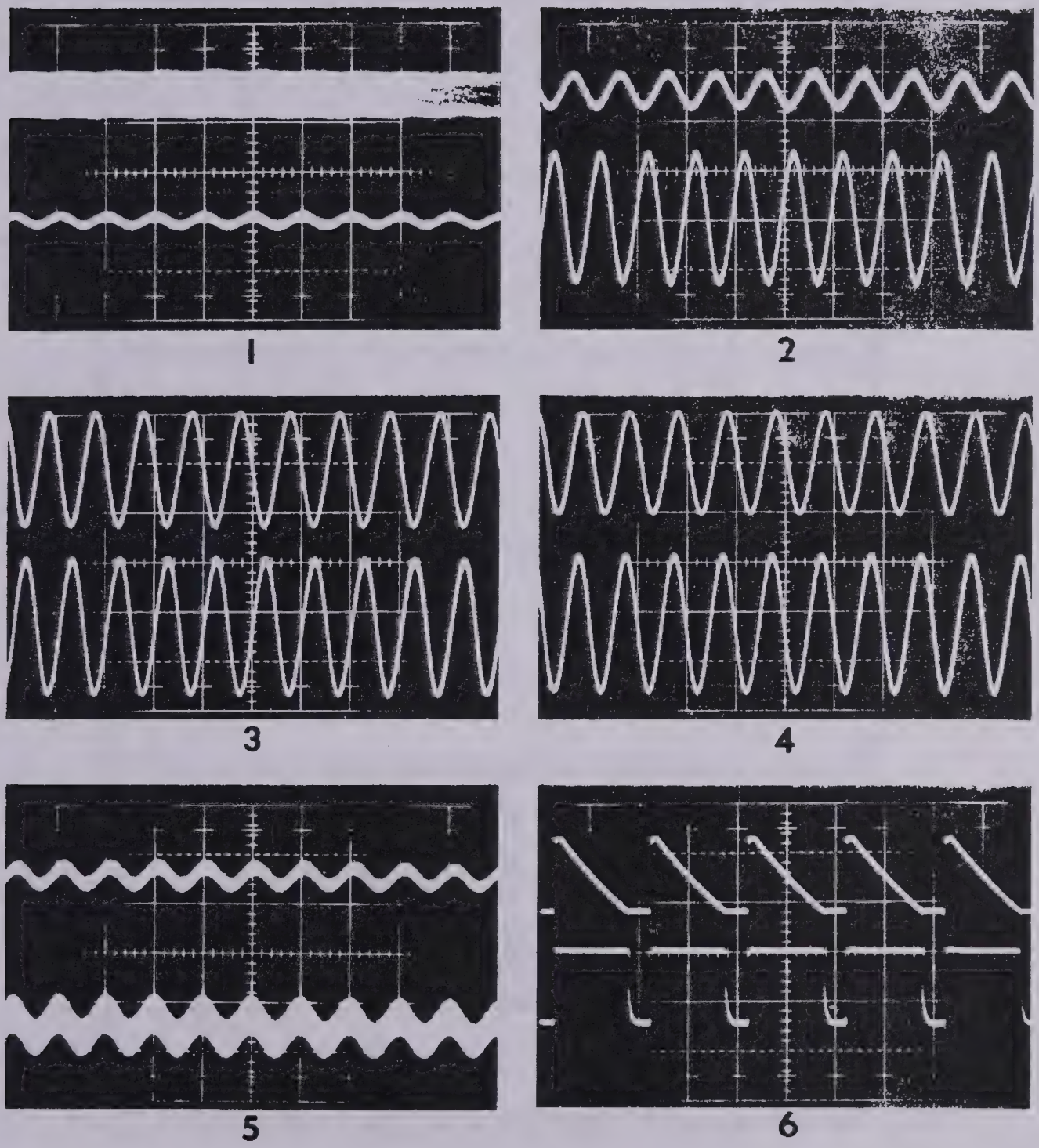

FIGURE 6-2D ASSEMBLY 599746 WAVEFORMS

TABLE 6-3E ASSEMBLY 599747 WAVEFORMS *

Plate Number	Test Point	Scale Factors		Remarks
		Vert., v/div	Horizontal	
1	Collector Q33 Base Q33	2 1	0.5 μsec/div	Trigger with lower waveform
2	Collector Q33 Collector Q41	5	5 μsec/div	
3	Collector Q33 Collector Q41			
4	Collector Q33 Collector Q32			
5	Collector Q33 Collector Q30			
6	Collector Q33 Collector Q28		10 μsec/div	
7	Collector Q33 Collector Q26			

* See paragraph 6-42.

(Cont.) TABLE 6-3E ASSEMBLY 599747 WAVEFORMS *

Plate Number	Test Point	Scale Factors		Remarks
		Vert., v/div	Horizontal	
8	Cathode CR9 Cathode CR10	5	10 μsec/div	Trigger with lower waveform
9	Cathode CR11 Cathode CR12			
10	Cathode CR13 Cathode CR14			
11	Cathode CR8 Cathode CR7			
12	Cathode CR6 Cathode CR5			
13	Cathode CR4 Cathode CR3			
14	Cathode CR2 Cathode CR1			

* See paragraph 6-42.

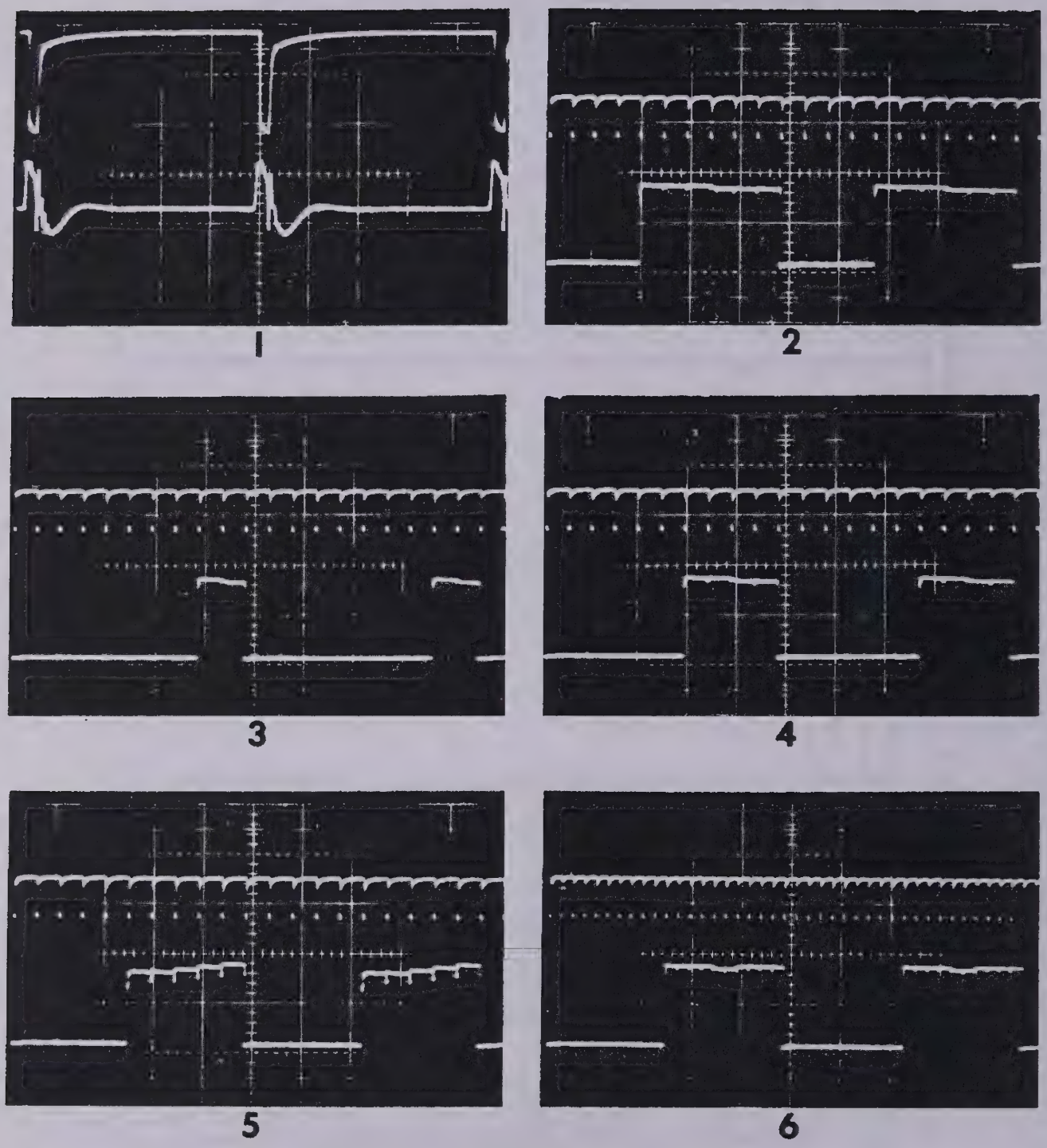

FIGURE 6-2E ASSEMBLY 599747 WAVEFORMS

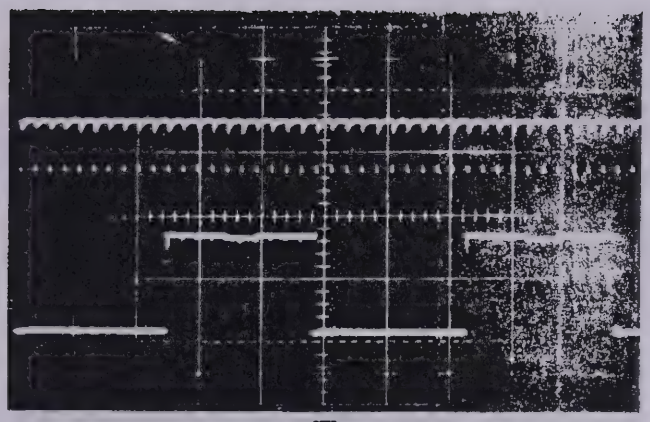

7

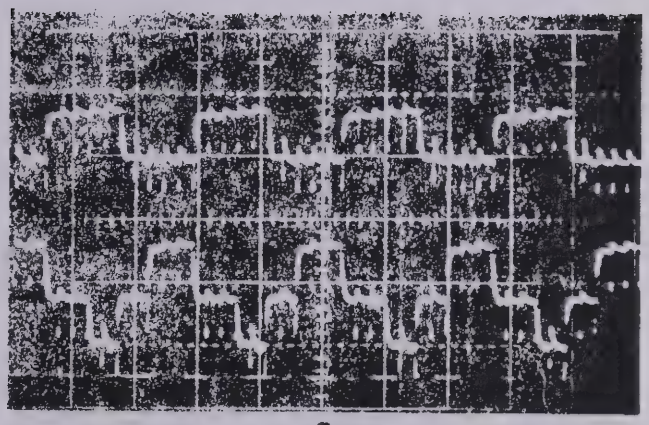

8

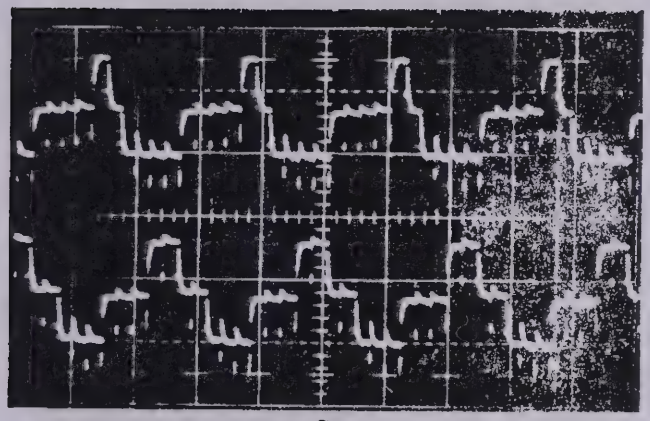

9

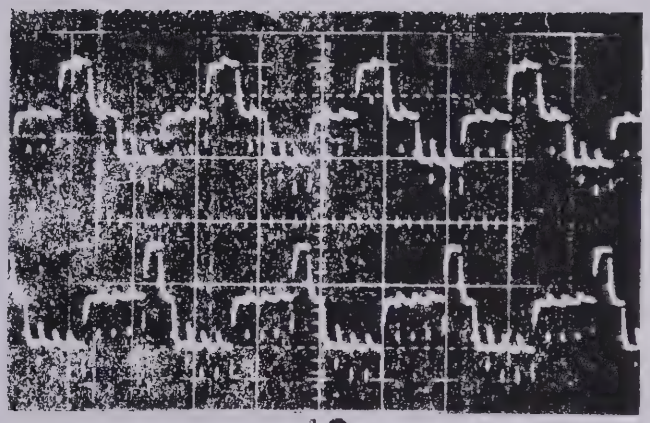

10

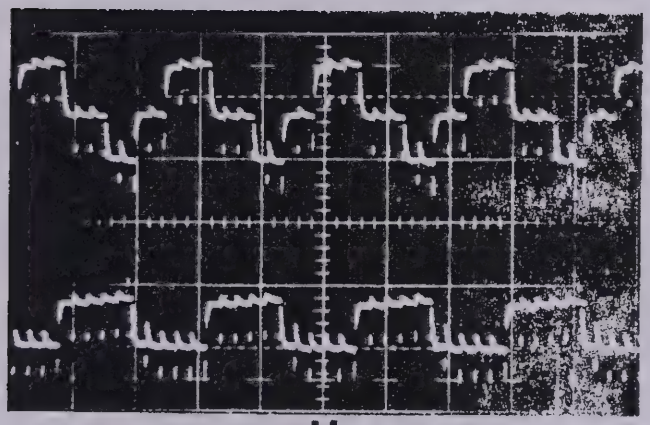

11

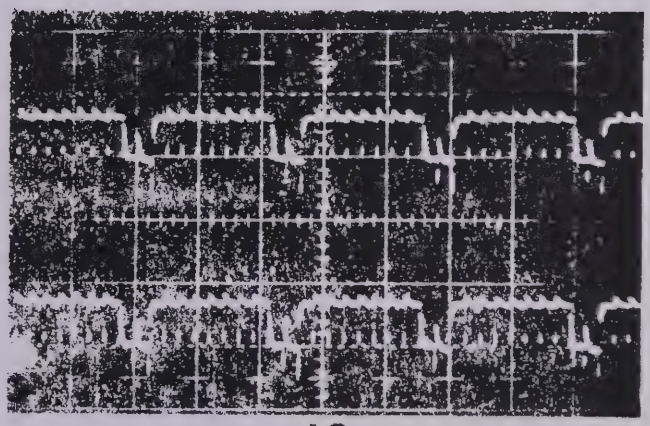

12

FIGURE 6-2E (cont.)

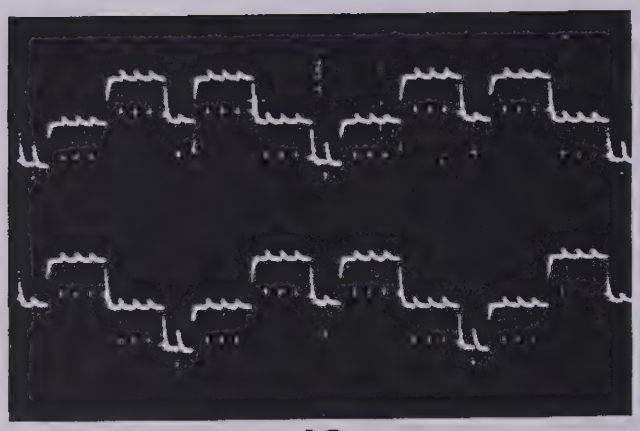

13

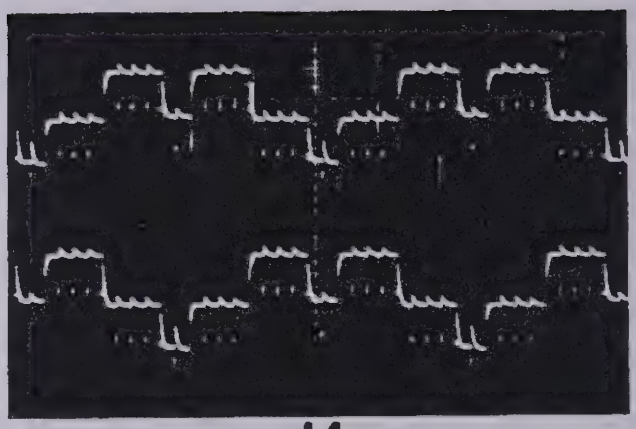

14

FIGURE 6-2E (cont.)

TABLE 6-3F ASSEMBLY 599800 WAVEFORMS *

Plate Number	Test Point	Scale Factors		Remarks
		Vert., v/div	Horizontal	
1	P5, Pin D	0.05	0.5 μsec/div	Internal trigger VOLUME: fully CW
2	Emitter Q3 Emitter Q4	0.5		VOLUME: fully CW
3	Emitter Q6 Collector Q8	2 5	0.2 msec/div	Trigger on lower waveform
4	Base Q10 Drain Q9	0.05		VOLUME: fully CW
5	P5, Pin C	1		Internal trigger VOLUME: fully CW

* See paragraph 6-42.

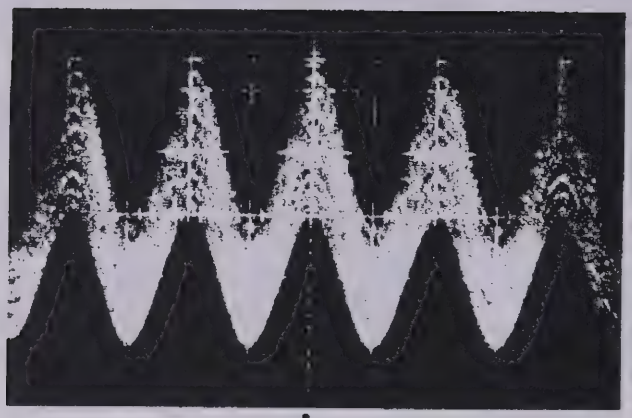

1

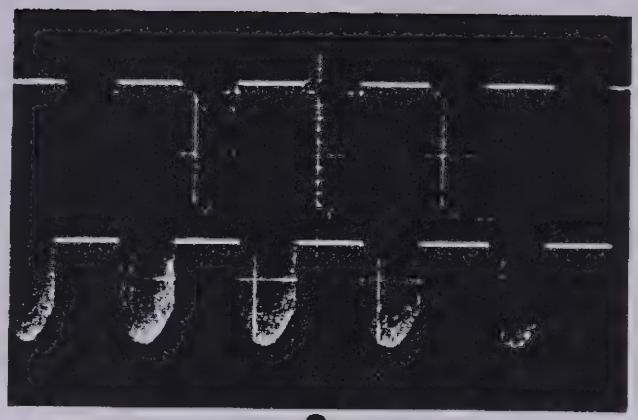

2

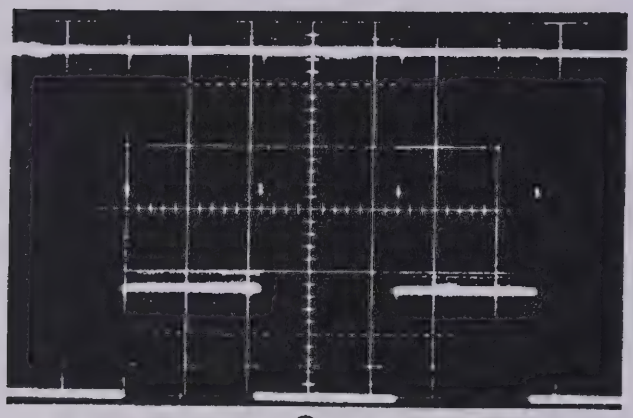

3

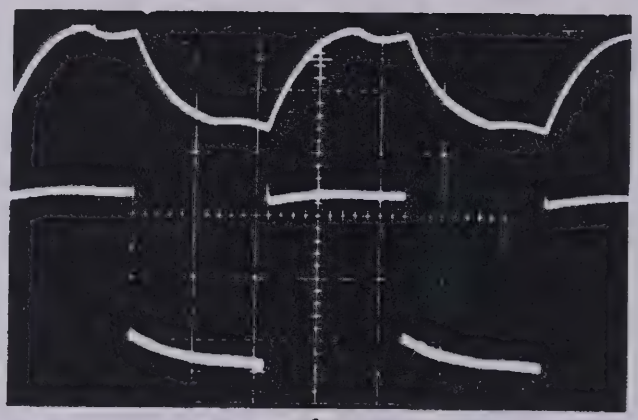

4

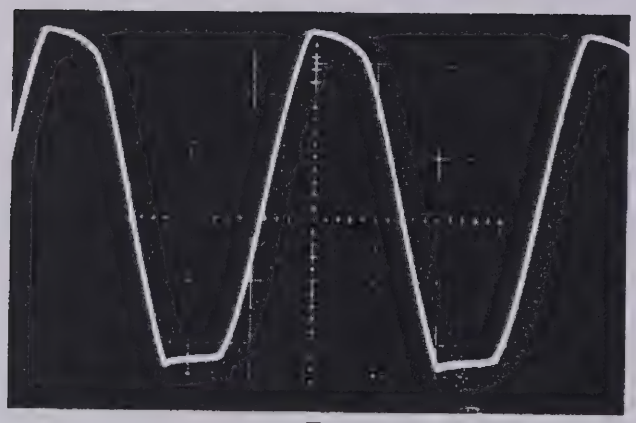

5

FIGURE 6-2F ASSEMBLY 599800 WAVEFORMS

TABLE 6-3G ASSEMBLY 599569 WAVEFORMS

Plate Number	Test Point	Scale Factors		Remarks
		Vert., v/div	Horizontal	
1	TP 1 TP 2	1	10 msec/div	Internal trigger RETARD servo
2	TP 4 TP 3	2 0.5	1 μsec/div	
3	TP 6 TP 5	5 2	2 μsec/div	
4	TP 7	5	20 msec/div	ADVANCE or RETARD to observe Internal trigger

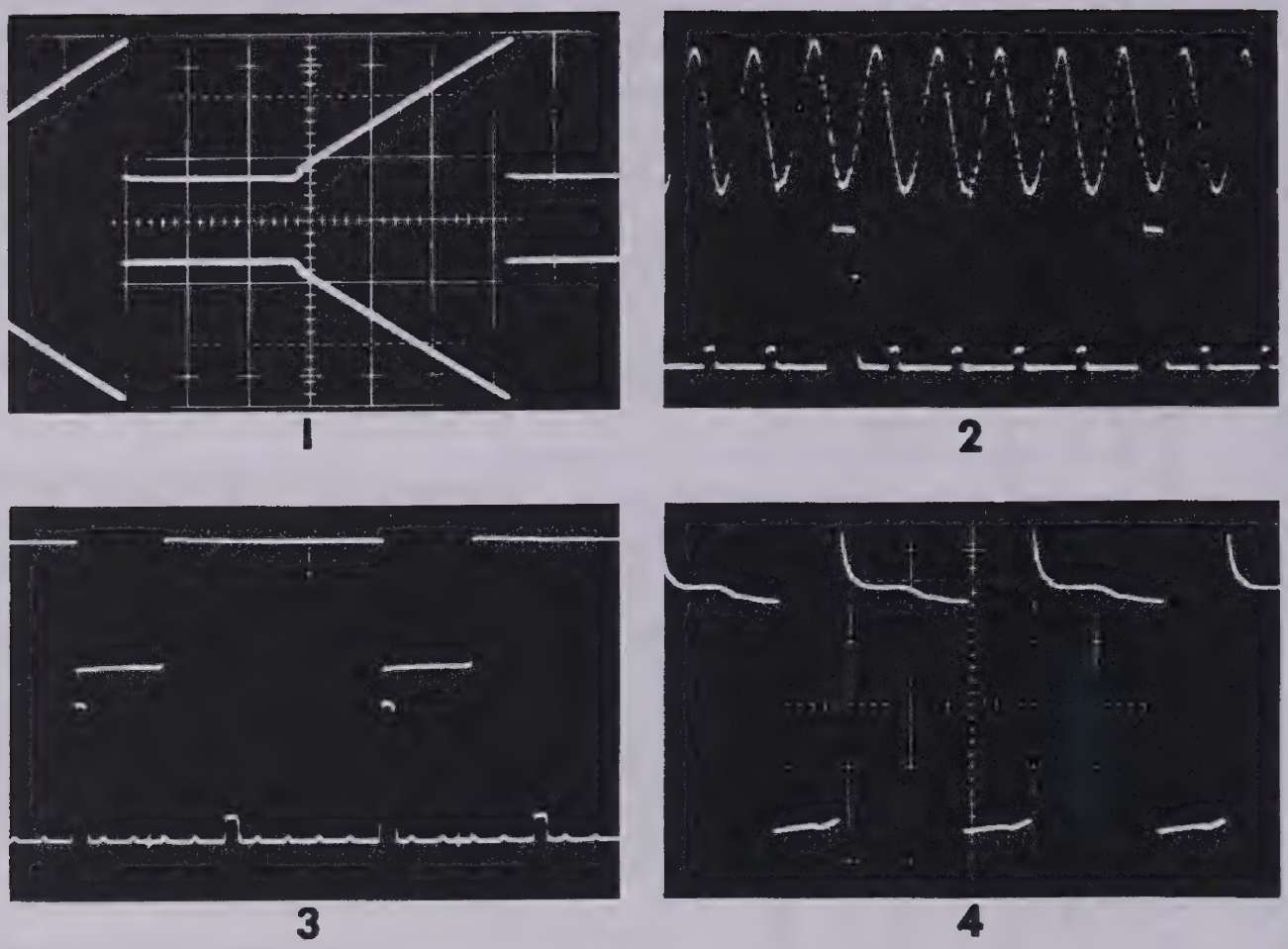

FIGURE 6-2G ASSEMBLY 599569 WAVEFORMS

TABLE 6-3H ASSEMBLY 599570 WAVEFORMS

Plate Number	Test Point	Scale Factors		Remarks
		Vert., v/div	Horizontal	
1	TP 10	2	2 μsec/div	
2	TP 12 TP 11		0.2 μsec/div	
3	TP 14 TP 13		1 μsec/div	
4	TP 16 TP 15		10 μsec/div	
5	TP 23 TP 17		20 μsec/div	Upper waveform pulse time depends on MICROSECONDS dial.
6	TP 19 TP 18			
7	TP 20 TP 21		2 μsec/div	Lower waveform pulse time changes with MICROSECONDS dial

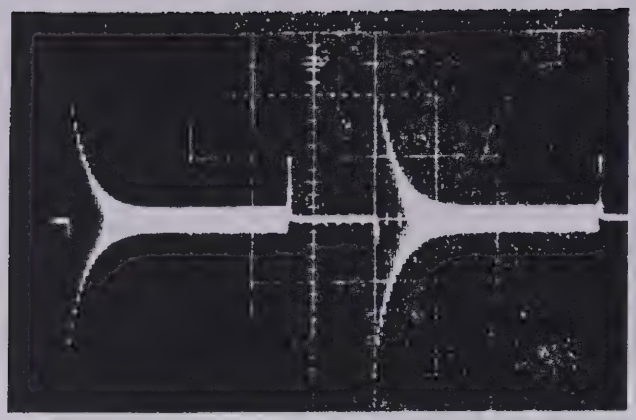

1

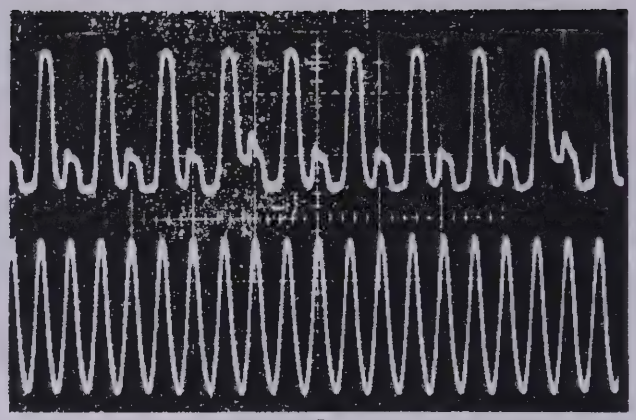

2

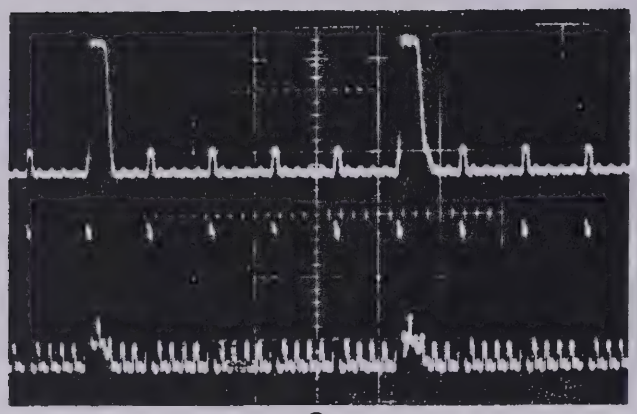

3

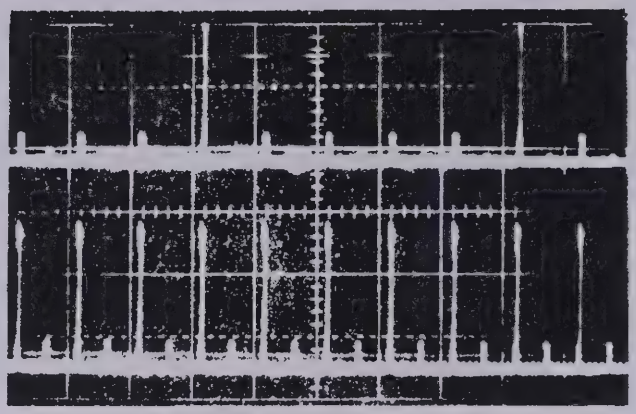

4

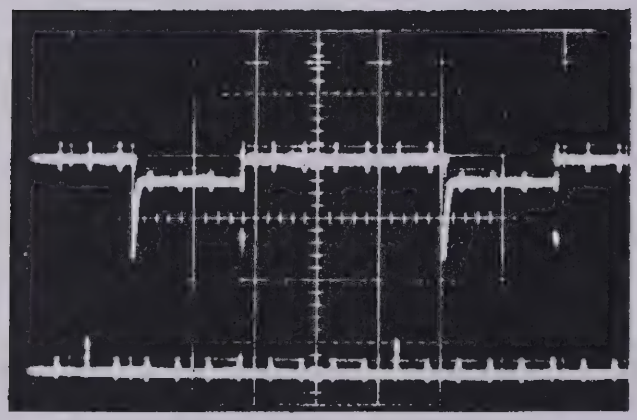

5

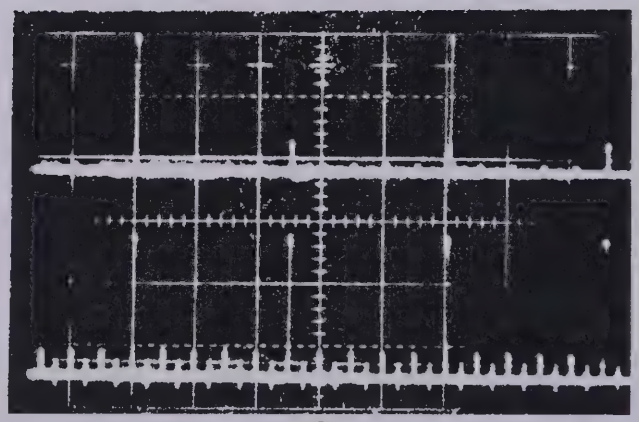

6

FIGURE 6-2H ASSEMBLY 599570 WAVEFORMS

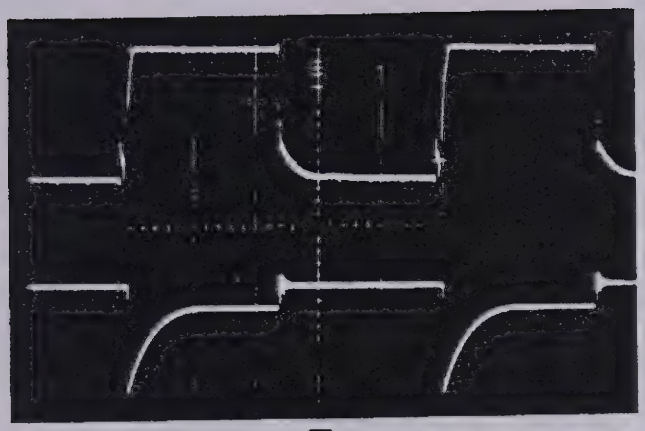

7

FIGURE 6-2H (cont.)

Table 6-3J Assembly 599761 Waveforms

Plate Number	Test Point		Scale Factors		Remarks
	Assembly No.	Point	Vert., v/div	Horizontal	
1	599799 599829	K K	5	0.5 μsec/div	TIME CONSTANT: 150 sec CARRIER LEVEL: 0 db PHASE ERROR: 0 rad
2	599799 599829	K K			Same as above plus Servo advanced by +4.0 MICRO-SECONDS.

599848A

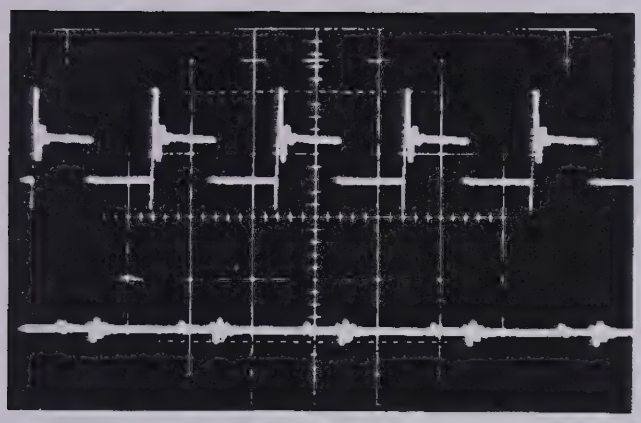

1

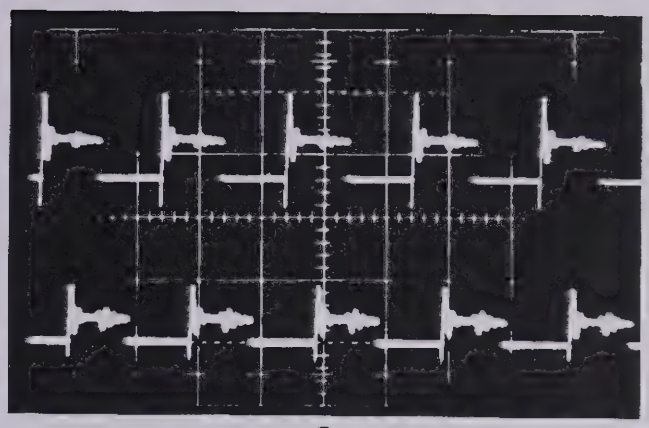

2

FIGURE 6-2J ASSEMBLY 599761 WAVEFORMS

SECTION VII

REPLACEABLE PARTS

7-1 INTRODUCTION

7-2 This section is divided into the following three parts: an Item/Reference Designation Index, a List of Replaceable Parts, and a key to the Manufacturer's Federal Code Number. The use of each part is explained below.

7-3 Item/Reference Designation Index

7-4 This index permits the user to find the TRACOR Stock Number for every part in the Model 599J. The system is broken down by assemblies, the names of which head each subsection of the index. All parts of any given assembly are listed as follows:

(1) Parts without reference designations are listed first in Item Number order.

(2) Parts with a reference designation are listed in alpha-numeric order by reference designation.

7-5 To find the TRACOR Stock Number for any part it is necessary to know its reference designation (if it has one) and the assembly in which the part is contained. With this information, the subsection for the appropriate assembly can be located and the TRACOR Stock Number noted beside the reference designation of the part in question. A brief description of the part and the stock number of the assembly on which it is found then follows. The reference designation itself will be found in at least one of

three places: on the assembly, on a schematic diagram, or on an assembly drawing.

7-6 List of Replaceable Parts

7-7 When the TRACOR Stock Number of the part has been determined, the List of Replaceable parts can be used. Beside the TRACOR Stock Number for a given part is found a brief description of the part and a qualified manufacturer and his part number. The last column shows the total number of a given part used in the finished Model 599J. Those items for which REF appears in the last column do not have unitless quanties associated with them.

7-8 Code List of Manufacturers

7-9 In the List of Replaceable Parts, the manufacturer of each part is listed by his Federal-Supply-Code-for-Manufacturers code number. A manufacturer may be quickly identified by noting his code number in the previous list and locating that number in the present list. Code numbers will be found in numerical order in this list.

7-10 ORDERING INFORMATION

Deleted.

7-12 (Deleted)

7-13 INDEXES

7-14 The following pages comprise the three indexes described in the paragraphs above.

ITEM NUMBER	REFERENCE DESIGNATION	TRACOR STOCK NUMBER	DESCRIPTION	STOCK NUMBER USED ON
			THUMBWHEEL SW ASSY	6734
2		8819-0022	WIRE BUS NO 22	6734
7	R 6	211-2153	RESISTOR 215K	6734
10	R 7	211-2613	RESISTOR 261K	6734
6	R 8	211-2152	RESISTOR 21X5K	6734
9	R 9	211-2612	RESISTOR 26X1K	6734
12	R 10	211-5622	RESISTOR 56X2K	6734
4	R 11	211-1103	RESISTOR 110K	6734
5	R 12	211-2151	RESISTOR 2X15K	6734
8	R 13	211-2611	RESISTOR 2X61K	6734
11	R 14	211-5621	RESISTOR 5X62K	6734
3	R 15	211-1102	RESISTOR 11X0	6734
1	S 3	6742	SWITCH THUMBWHEEL	6734
			TRANSISTOR ASSY	7173
1		900-0673	TRANSISTOR	7173
2		3426-0097	TUBING	7173
3		3426-0017	TUBING	7173
4		3561-0301	POTTING COMPOUND	7173
			PCB ASSY RF PREAMP	9748
1		9212	BOARD PC	9748
2		175-0024	SCR BIND HD 4-40X3/8	9748
3		620-0123	WASHER LOCK NO 4	9748
5		599253-0110	SPACER	9748
6		651-0005	NUT HEX SPECIAL ELEC	9748
9		3571-0753	STRAP RUBBER	9748
10		3326-0046	RIVET	9748
11		599814	SHIELD RF PREAMP	9748
12		599826	INSULATOR SHIELD	9748
13		705-0410	WIRE 22AWG YEL	9748
14		8819-0022	BUS WIRE NO 22 AWG	9748
15		3657-0011	TRANSIPAD	9748
16		3646	SHIELD TRANSFORMER	9748
46	C 1	3319-0102	CAP 1000 PF	9748
61	C 2	27512-0152	CAP 1500PF	9748
60	C 3	21485-9101	CAP 1MFD 35V	9748
58	C 4	3321-9102	CAP 0.1MFD	9748
74	C 5	8914-0101	CAP 100MFD 20V	9748
47	C 6	3319-0331	CAP 330 PF	9748
50	C 7	3324-9473	CAP .047 MFD	9748
58	C 8	3321-9102	CAP 0.1MFD	9748
58	C 9	3321-9102	CAP 0.1MFD	9748
57	C 10	8914-0150	CAP 15MFD 20V	9748
48	C 11	3319-0680	CAP 68 PF	9748
48	C 12	3319-0680	CAP 68 PF	9748
66	C 13	27513-0561	CAP 560PF	9748
63	C 14	27512-0221	CAP 220PF	9748
65	C 15	27513-0122	CAP 1200PF	9748
62	C 16	27512-0182	CAP 1800PF	9748
60	C 17	21485-9101	CAP 1MFD 35V	9748
49	C 18	3319-0681	CAP 680 PF	9748
60	C 19	21485-9101	CAP 1MFD 35V	9748
60	C 20	21485-9101	CAP 1MFD 35V	9748
74	C 21	8914-0101	CAP 100MFD 20V	9748
59	C 22	8918-0331	CAP 330MFD 6V	9748
59	C 23	8918-0331	CAP 330MFD 6V	9748
60	C 24	21485-9101	CAP 1MFD 35V	9748
64	C 25	27512-0392	CAP 3900PF	9748
63	C 26	27512-0221	CAP 220PF	9748
60	C 27	21485-9101	CAP 1MFD 35V	9748
60	C 28	21485-9101	CAP 1MFD 35V	9748
60	C 29	21485-9101	CAP 1MFD 35V	9748
73	C 30	8917-9471	CAP 4.7MFD 10V	9748
58	C 31	3321-9102	CAP 0.1MFD	9748
56	L 1	3925-0004	INDUCTOR BEAD	9748
56	L 2	3925-0004	INDUCTOR BEAD	9748
56	L 3	3925-0004	INDUCTOR BEAD	9748
56	L 4	3925-0004	INDUCTOR BEAD	9748
56	L 5	3925-0004	INDUCTOR BEAD	9748

ITEM NUMBER	REFERENCE DESIGNATION	T R A C O R STOCK NUMBER	DESCRIPTION	STOCK NUMBER USED ON
51	L 6	3422-0332	INDUCTOR 3.3MH	9748
51	L 7	3422-0332	INDUCTOR 3.3MH	9748
52	L 8	3422-0392	INDUCTOR 3.9MH	9748
52	L 9	3422-0392	INDUCTOR 3.9MH	9748
56	L 10	3925-0004	INDUCTOR BEAD	9748
56	L 11	3925-0004	INDUCTOR BEAD	9748
56	L 12	3925-0004	INDUCTOR BEAD	9748
56	L 13	3925-0004	INDUCTOR BEAD	9748
56	L 14	3925-0004	INDUCTOR BEAD	9748
56	L 15	3925-0004	INDUCTOR BEAD	9748
56	L 16	3925-0004	INDUCTOR BEAD	9748
45	P 1	3318-0028	CONN PCB	9748
42	Q 1	900-3702	TSTR 2N3702	9748
42	Q 2	900-3702	TSTR 2N3702	9748
43	Q 3	900-3705	TSTR 2N3705	9748
43	Q 4	900-3705	TSTR 2N3705	9748
43	Q 5	900-3705	TSTR 2N3705	9748
43	Q 6	900-3705	TSTR 2N3705	9748
43	Q 7	900-3705	TSTR 2N3705	9748
43	Q 8	900-3705	TSTR 2N3705	9748
43	Q 9	900-3705	TSTR 2N3705	9748
42	Q 10	900-3702	TSTR 2N3702	9748
42	Q 11	900-3702	TSTR 2N3702	9748
43	Q 12	900-3705	TSTR 2N3705	9748
43	Q 13	900-3705	TSTR 2N3705	9748
72	Q 14	900-0708	TSTR 2N708	9748
72	Q 15	900-0708	TSTR 2N708	9748
72	Q 16	900-0708	TSTR 2N708	9748
72	Q 17	900-0708	TSTR 2N708	9748
42	Q 18	900-3702	TSTR 2N3702	9748
42	Q 19	900-3702	TSTR 2N3702	9748
43	Q 20	900-3705	TSTR 2N3705	9748
71	Q 21	900-3707	TSTR 2N3707	9748
44	Q 22	900-3708	TSTR 2N3708	9748
44	Q 23	900-3708	TSTR 2N3708	9748
42	Q 24	900-3702	TSTR 2N3702	9748
78	Q 25	900-3819	TSTR 2N3819	9748
71	Q 26	900-3707	TSTR 2N3707	9748
17	R 1	200-0100	RES FXD COMP 10 OHMS	9748
25	R 2	200-0470	RES FXD COMP 47 OHMS	9748
35	R 3	212-2611	RES FXD FILM 2.61K	9748
33	R 4	212-1472	RES FXD FILM 14.7K	9748
41	R 5	212-9091	RES FXD FILM 9.09K	9748
27	R 6	200-0560	RES FXD COMP 56 OHMS	9748
41	R 7	212-9091	RES FXD FILM 9.09K	9748
25	R 8	200-0470	RES FXD COMP 47 OHMS	9748
25	R 9	200-0470	RES FXD COMP 47 OHMS	9748
18	R 10	200-0103	RES FXD COMP 10K	9748
19	R 11	200-0333	RES FXD COMP 33K	9748
19	R 12	200-0333	RES FXD COMP 33K	9748
29	R 13	212-1001	RES FXD FILM 1.00K	9748
18	R 14	200-0103	RES FXD COMP 10K	9748
31	R 15	212-1331	RES FXD FILM 1.33K	9748
36	R 16	212-3480	RES FXD FILM 348 OHMS	9748
34	R 17	212-1961	RES FXD FILM 1.96K	9748
34	R 18	212-1961	RES FXD FILM 1.96K	9748
38	R 19	212-5111	RES FXD FILM 5.11K	9748
55	R 20	3838-0103	RES 10K VAR	9748
36	R 21	212-3480	RES FXD FILM 348 OHMS	9748
29	R 22	212-1001	RES FXD FILM 1.00K	9748
23	R 23	200-0332	RES FXD COMP 3.3K	9748
23	R 24	200-0332	RES FXD COMP 3.3K	9748
22	R 25	200-0221	RES FXD COMP 220 OHMS	9748
29	R 26	212-1001	RES FXD FILM 1.00K	9748
32	R 27	212-1471	RES FXD FILM 1.47K	9748
38	R 28	212-5111	RES FXD FILM 5.11K	9748
38	R 29	212-5111	RES FXD FILM 5.11K	9748
31	R 30	212-1331	RES FXD FILM 1.33K	9748
54	R 31	3838-0101	RES 100 OHMS VAR	9748
37	R 32	212-5110	RES FXD FILM 511 OHMS	9748
31	R 33	212-1331	RES FXD FILM 1.33K	9748
37	R 34	212-5110	RES FXD FILM 511 OHMS	9748
24	R 35	212-2372	RES FXD FILM 23.7K	9748
7	R 36	200-0223	RES FXD COMP 22K	9748
29	R 38	212-1001	RES FXD FILM 1.00K	9748
26	R 39	200-0472	RES FXD COMP 4.7K	9748
29	R 40	212-1001	RES FXD FILM 1.00K	9748

ITEM NUMBER	REFERENCE DESIGNATION	TRACOR STOCK NUMBER	DESCRIPTION	STOCK NUMBER USED ON
29	R 41	212-1001	RES FXD FILM 1.00K	9748
26	R 42	200-0472	RES FXD COMP 4.7K	9748
23	R 43	200-0332	RES FXD COMP 3.3K	9748
31	R 44	212-1331	RES FXD FILM 1.33K	9748
20	R 45	200-0122	RES FXD COMP 1.2K	9748
40	R 46	212-8251	RES FXD FILM 8.25K	9748
28	R 47	200-0563	RES FXD COMP 56K	9748
21	R 48	200-0220	RES FXD COMP 22 OHMS	9748
18	R 49	200-0103	RES FXD COMP 10K	9748
24	R 50	212-2372	RES FXD FILM 23.7K	9748
27	R 51	200-0560	RES FXD COMP 56 OHMS	9748
17	R 52	200-0100	RES FXD COMP 10 OHMS	9748
30	R 53	212-1101	RES FXD FILM 1.10K	9748
17	R 54	200-0100	RES FXD COMP 10 OHMS	9748
8	R 55	200-0331	RES FXD COMP 330 OHMS	9748
69	R 56	200-0102	RES FXD COMP 1K	9748
25	R 57	200-0470	RES FXD COMP 47 OHMS	9748
40	R 58	212-8251	RES FXD FILM 8.25K	9748
27	R 59	200-0560	RES FXD COMP 56 OHMS	9748
8	R 60	200-0331	RES FXD COMP 330 OHMS	9748
39	R 61	200-0152	RES FXD COMP 1.5K	9748
77	R 62	200-0822	RES FXD COMP 8.2K	9748
76	R 63	200-0683	RES FXD COMP 68K	9748
69	R 64	200-0102	RES FXD COMP 1K	9748
75	R 65	200-0564	RES FXD COMP 560K	9748
4	R 66	200-0104	RES FXD COMP 100K	9748
70	R 67	200-0101	RES FXD COMP 100 OHMS	9748
18	R 68	200-0103	RES FXD COMP 10K	9748
70	R 69	200-0101	RES FXD COMP 100 OHMS	9748
26	R 70	200-0472	RES FXD COMP 4.7K	9748
69	R 71	200-0102	RES FXD COMP 1K	9748
26	R 72	200-0472	RES FXD COMP 4.7K	9748
53	T 1	3645-0003	TRANSFORMER	9748
			ASSY LOOP ANT CABLE	599168
1		3388-0028	CABLE COAX LG IN FT	599168
2		4196-0001	CONN BNC	599168
			ASSY PCB 22 PIN	599266
1		651-0017	NUT 6 32	599266
3		3326-0042	RIVET POP	599266
4		3326-0046	RIVET POP	599266
5		3805-0041	BOLT SPADE 6 32	599266
6		599195	BOARD PRINTED CIRCUIT	599266
7	A 1	599267	ASSY CONN	599266
2	P 1	3318-0028	CONN 22 PIN	599266
			CONNECTOR ASSY	599267
1		3318-5017	CONN 22 PIN	599267
2		3806-0001	CEMENT	599267
3		3806-0020	ACTIVATOR	599267
4		599786	BOARD CONN BARRIER	599267
			CABL ASSY 24PIN PATCH	599283
1		94-0026	TUBING SHRINKABLE	599283
2		95-0025	TUBING INSULATING	599283
3		705-0010	WIRE 22AWG BLK	599283
4		705-0110	WIRE 22AWG BRN	599283
5		705-0210	WIRE 22AWG RED	599283
6		705-0310	WIRE 22AWG ORN	599283
7		705-0410	WIRE 22AWG YEL	599283
8		705-0510	WIRE 22AWG GRN	599283
9		705-0610	WIRE 22AWG BLUE	599283
10		705-0710	WIRE 22AWG VIO	599283
11		705-0810	WIRE 22AWG GREY	599283
12		705-0900	WIRE 22AWG WHT/BLK	599283
13		705-0901	WIRE 22AWG WHT/BRN	599283
14		705-0902	WIRE 22AWG WHT/RED	599283
15		705-0903	WIRE 22AWG WHT/ORN	599283

ITEM NUMBER	REFERENCE DESIGNATION	TRACOR STOCK NUMBER	DESCRIPTION	STOCK NUMBER USED ON
16		705-0904	WIRE 22AWG WHT/YEL	599283
17		705-0905	WIRE 22AWG WHT/GRN	599283
18		705-0906	WIRE 22AWG WHT/BLUE	599283
19		705-0907	WIRE 22AWG WHT/VIO	599283
20		705-0908	WIRE 22AWG WHT/GREY	599283
21		705-0910	WIRE 22AWG WHT	599283
22	P 1	3394-0004	CONN 24PIN MALE	599283
23	P 2	3394-1004	CONN 24PIN FEMALE	599283
			ASSY CHASSIS	599378
1		220-0024	SCREW FL HD 6 32X3/8	599378
2		223-0032	SCREW FL HD 10 32X1/2	599378
3		612-0017	HANDLE	599378
4		3326-0044	RIVET POP	599378
5		3326-1043	RIVET POP	599378
6		599016-0001	BAR CHASSIS	599378
7		599016-0002	BAR CHASSIS	599378
8		599016-0003	BAR CHASSIS	599378
9		599017-0006	RAIL GUIDE	599378
10		599019-0001	COVER BOTTOM	599378
11		599019-0002	COVER TOP	599378
12		599322-0001	BRACKET END LEFT	599378
13		599368-0001	BRACKET END RIGHT	599378
			ASSY WIRING HARNESS	599384
1		705-0010	WIRE 22 AWG BLK	599384
2		706-0010	WIRE 26 AWG BLK	599384
3		706-0110	WIRE 26 AWG BRN	599384
4		706-0210	WIRE 26 AWG RED	599384
4		706-0903	WIRE 26 AWG WH/ORN	599384
5		706-0310	WIRE 26 AWG ORN	599384
6		706-0410	WIRE 26 AWG YEL	599384
7		706-0510	WIRE 26 AWG GRN	599384
8		706-0610	WIRE 26 AWG BLUE	599384
9		706-0710	WIRE 26 AWG VIO	599384
10		706-0810	WIRE 26 AWG GRAY	599384
11		706-0900	WIRE 26 AWG WH/BLK	599384
12		706-0901	WIRE 26 AWG WH/BRN	599384
13		706-0902	WIRE 26 AWG WH/RED	599384
15		706-0904	WIRE 26 AWG WH/YEL	599384
16		706-0905	WIRE 26 AWG WH/GRN	599384
17		706-0906	WIRE 26 AWG WH/BLUE	599384
18		706-0907	WIRE 26 AWG WH/VIO	599384
19		706-0908	WIRE 26 AWG WH/GRAY	599384
21		3389-0011	CORD LACING	599384
23		3486-0001	LUG SOLDER NO4	599384
24	C 1	8914-0101	CAP 100 MFD 20V	599384
20	J 1	3318-5016	CONN 22 PIN	599384
20	J 2	3318-5016	CONN 22 PIN	599384
22	P 1	3394-0004	CONN 24 PIN	599384
			PHASE SERVO ASSY	599394-0002
1		175-0016	SCR BIND HD 4-40X1/4	599394-0002
2		175-0020	SCR BIND HD 4-40X5/16	599394-0002
4		175-0032	SCR BIND HD 4-40X1/2	599394-0002
5		177-0016	SCR BIND HD 6-32X1/4	599394-0002
6		177-0020	SCR BIND HD 6-32X5/16	599394-0002
10		242-0020	SCR FIL HD 6-32X5/16	599394-0002
11		365-0024	SCR HEX HD 4-40X3/8	599394-0002
12		399-0016	SCR HEX SOC 4 40X1/4	599394-0002
13		561-0024	SCR HEX SOC 6 32X3/8	599394-0002
14		611-0053	FERRULE	599394-0002
15		612-0003	HANDLE	599394-0002
17		617-0267	WASHER FLAT NO 6	599394-0002
18		620-0123	WASHER IT LOCK NO 4	599394-0002
19		620-0125	WASHER IT LOCK NO 6	599394-0002
20		639-0006	WASHER NYLON NO 4	599394-0002
21		647-0010	NUT SERRATED 15/32 32	599394-0002
22		649-0074	NUT 4-40	599394-0002
23		649-0114	NUT 6-32	599394-0002
24		653-0019	WASHER FLAT 15/32	599394-0002

ITEM NUMBER	REFERENCE DESIGNATION	TRACOR STOCK NUMBER	DESCRIPTION	STOCK NUMBER USED ON
25		3326-0032	RIVET POP N	599394-0002
26		3326-0042	RIVET POP	599394-0002
27		3326-0045	RIVET POP	599394-0002
28		3326-0046	RIVET POP	599394-0002
29		3326-0132	RIVET POP	599394-0002
30		3331-0037	NUT CLINCH 6-32	599394-0002
31		3455-0772	CLAMP CABLE	599394-0002
32		3458-0094	KNOB POINTER	599394-0002
33		3475-0001	SCREW CAPTIVE 6-32	599394-0002
36		6152	PLATE IDENTIFICATION	599394-0002
37		21472-0003	INK MARKING	599394-0002
38		599213	SUPPORT CHASSIS	599394-0002
39		599246	BRACKET	599394-0002
40		599247	CHASSIS MOD BOTTOM	599394-0002
41		599248	BAR CORNER	599394-0002
42		599249	GUIDE PCB	599394-0002
43		599250	COVER ACCESS	599394-0002
46		599255	BRKT PANEL SPACER	599394-0002
47		599256	SPACER FRONT	599394-0002
48		599257	COVER	599394-0002
49		599273-0735	SPACER REAR	599394-0002
50		599359	PANEL FRONT	599394-0002
51		599363	PANEL REAR	599394-0002
58		3807-0001	RUBBER STRIP	599394-0002
54	A 2	599569	ASSY PCB LO LIM/FILT	599394-0002
55	A 3	599570-0002	ASSY PCB PHASE SHIFT	599394-0002
52	A 4	599384	ASSY WIRING HARNESS	599394-0002
53	M 1	599403	COUNTER	599394-0002
7	R 1	205-2372	RES FXD FILM 23X7 K	599394-0002
9	R 2	205-8252	RES FXD FILM 82X5 K	599394-0002
8	R 3	205-3163	RES FXD FILM 316K	599394-0002
34	S 1	3639-2002	SWITCH	599394-0002
35	S 2	3642-0016	SWITCH	599394-0002
			ASSY PCB LO LIM/FILT	599569
1		82	INSULATOR TSTR	599569
61		3326-0046	RIVET POP	599569
62		3326-0132	RIVET POP	599569
73		3657-0001	INSULATOR TSTR	599569
78		21472-0003	INK MARKING AS REQ	599569
84		599354	BOARD PRINTED CIRCUIT	599569
74	C 1	8916-9331	CAP 3X3 MFD 15V	599569
74	C 2	8916-9331	CAP 3X3 MFD 15V	599569
63	C 3	3403-9103	CAP FXD CER .01 MFD	599569
63	C 4	3403-9103	CAP FXD CER .01 MFD	599569
79	C 5	27511-0561	CAP 560 PFD 500V	599569
81	C 6	27512-0180	CAP 18 PFD 500V	599569
71	C 7	3632-0011	CAP X8 30 PFD VAR	599569
82	C 8	27512-0181	CAP 180 PFD 500V	599569
58	C 9	3324-9154	CAP 1500 PFD 200V	599569
83	C 10	27512-0271	CAP 270 PFD 500V	599569
72	C 11	3655-1001	CAP X001 MFD 100V	599569
72	C 12	3655-1001	CAP X001 MFD 100V	599569
77	C 13	8918-0560	CAP 56 MFD 6V	599569
75	C 14	8917-0121	CAP 120 MFD 10V	599569
72	C 15	3655-1001	CAP X001 MFD 100V	599569
68	C 16	3612-9102	CAP X1 MFD 200V	599569
60	C 17	3324-9475	CAP 470 PFD 200V	599569
58	C 18	3324-9154	CAP 1500 PFD 200V	599569
76	C 19	8917-0390	CAP 39 MFD 10V	599569
76	C 20	8917-0390	CAP 39 MFD 10V	599569
57	C 21	3319-0471	CAP 470 PFD 1000V	599569
74	C 22	8916-9331	CAP 3X3 MFD 15V	599569
59	C 23	3324-9223	CAP X022 MFD 200V	599569
68	C 24	3612-9102	CAP X1 MFD 200V	599569
68	C 25	3612-9102	CAP X1 MFD 200V	599569
63	C 26	3403-9103	CAP FXD CER .01 MFD	599569
80	C 28	27512-0121	CAP 120 PFD 500V	599569
74	C 30	8916-9331	CAP 3X3 MFD 15V	599569
64	L 1	3568-0150	INDUCTOR 15 UH	599569
64	L 2	3568-0150	INDUCTOR 15 UH	599569
65	L 3	3568-0270	INDUCTOR 27 UH	599569
65	L 4	3568-0270	INDUCTOR 27 UH	599569
65	L 5	3568-0270	INDUCTOR 27 UH	599569
56	P 1	3318-0028	CONN 22 PIN	599569

ITEM NUMBER	REFERENCE DESIGNATION	TRACOR STOCK NUMBER	DESCRIPTION	STOCK NUMBER USED ON
53	Q 1	900-2270	TSTR NPN 2N2270	599569
53	Q 2	900-2270	TSTR NPN 2N2270	599569
55	Q 3	902-0711	TSTR PNP 2N711B	599569
55	Q 4	902-0711	TSTR PNP 2N711B	599569
53	Q 5	900-2270	TSTR NPN 2N2270	599569
55	Q 6	902-0711	TSTR PNP 2N711B	599569
49	Q 7	900-1305	TSTR PNP 2N71305	599569
52	Q 8	900-2218	TSTR NPN 2N2218	599569
49	Q 9	900-1305	TSTR PNP 2N71305	599569
52	Q 10	900-2218	TSTR NPN 2N2218	599569
53	Q 11	900-2270	TSTR NPN 2N2270	599569
49	Q 12	900-1305	TSTR PNP 2N71305	599569
53	Q 14	900-2270	TSTR NPN 2N2270	599569
55	Q 15	902-0711	TSTR PNP 2N711B	599569
53	Q 16	900-2270	TSTR NPN 2N2270	599569
55	Q 17	902-0711	TSTR PNP 2N711B	599569
51	Q 18	900-2102	TSTR NPN 2N2102	599569
54	Q 19	900-3134	TSTR PNP 2N3134	599569
54	Q 20	900-3134	TSTR PNP 2N3134	599569
51	Q 21	900-2102	TSTR NPN 2N2102	599569
50	Q 22	900-1995	TSTR NPN 2N1995	599569
53	Q 23	900-2270	TSTR NPN 2N2270	599569
53	Q 24	900-2270	TSTR NPN 2N2270	599569
48	Q 25	900-1304	TSTR NPN 2N1304	599569
49	Q 26	900-1305	TSTR PNP 2N71305	599569
53	Q 27	900-2270	TSTR NPN 2N2270	599569
49	Q 28	900-1305	TSTR PNP 2N71305	599569
49	Q 29	900-1305	TSTR PNP 2N71305	599569
53	Q 30	900-2270	TSTR NPN 2N2270	599569
53	Q 31	900-2270	TSTR NPN 2N2270	599569
53	Q 32	900-2270	TSTR NPN 2N2270	599569
53	Q 33	900-2270	TSTR NPN 2N2270	599569
49	Q 34	900-1305	TSTR PNP 2N71305	599569
48	Q 35	900-1304	TSTR NPN 2N1304	599569
48	Q 36	900-1304	TSTR NPN 2N1304	599569
49	Q 37	900-1305	TSTR PNP 2N71305	599569
53	Q 38	900-2270	TSTR NPN 2N2270	599569
49	Q 39	900-1305	TSTR PNP 2N71305	599569
49	Q 40	900-1305	TSTR PNP 2N71305	599569
53	Q 41	900-2270	TSTR NPN 2N2270	599569
53	Q 42	900-2270	TSTR NPN 2N2270	599569
53	Q 43	900-2270	TSTR NPN 2N2270	599569
47	Q 44	900-1038	TSTR PNP 2N1038	599569
48	Q 45	900-1304	TSTR NPN 2N1304	599569
49	Q 46	900-1305	TSTR PNP 2N1305	599569
2	R 1	200-0100	RES FXD COMP 10 OHM	599569
2	R 2	200-0100	RES FXD COMP 10 OHM	599569
4	R 3	200-0102	RES FXD COMP 1 KOHM	599569
17	R 4	200-0331	RES FXD COMP 330 OHM	599569
28	R 5	200-0821	RES FXD COMP 820 OHM	599569
3	R 6	200-0101	RES FXD COMP 100 OHM	599569
20	R 7	200-0470	RES FXD COMP 47 OHM	599569
11	R 8	200-0183	RES FXD COMP 18K	599569
25	R 9	200-0562	RES FXD COMP 5X6K	599569
19	R 10	200-0392	RES FXD COMP 3X9K	599569
7	R 11	200-0122	RES FXD COMP 1X2K	599569
15	R 12	200-0271	RES FXD COMP 270 OHM	599569
22	R 13	200-0472	RES FXD COMP 4X7K	599569
7	R 14	200-0122	RES FXD COMP 1X2K	599569
31	R 15	205-1211	RES FXD FILM 1X21K	599569
34	R 16	205-2370	RES FXD FILM 237 OHM	599569
18	R 17	200-0391	RES FXD COMP 390 OHM	599569
41	R 18	205-9090	RES FXD FILM 909 OHM	599569
34	R 19	205-2370	RES FXD FILM 237 OHM	599569
38	R 20	205-7321	RES FXD FILM 7X32K	599569
18	R 21	200-0391	RES FXD COMP 390 OHM	599569
12	R 22	200-0221	RES FXD COMP 220 OHM	599569
32	R 23	205-1542	RES FXD FILM 15X4K	599569
20	R 24	200-0470	RES FXD COMP 47 OHM	599569
35	R 25	205-3830	RES FXD FILM 383 OHM	599569
66	R 26	3596-0101	RES VAR 100 OHM	599569
35	R 27	205-3830	RES FXD FILM 383 OHM	599569
12	R 28	200-0221	RES FXD COMP 220 OHM	599569
3	R 30	200-0101	RES FXD COMP 100 OHM	599569
21	R 31	200-0471	RES FXD COMP 470 OHM	599569
13	R 32	200-0222	RES FXD COMP 2X2K	599569
33	R 33	205-2151	RES FXD FILM 2X15K	599569

ITEM NUMBER	REFERENCE DESIGNATION	TRACOR STOCK NUMBER	DESCRIPTION	STOCK NUMBER USED ON
13	R 34	200-0222	RES FXD COMP 2X2K	599569
9	R 35	200-0152	RES FXD COMP 1X5K	599569
21	R 36	200-0471	RES FXD COMP 470 OHM	599569
31	R 37	205-1211	RES FXD FILM 1X21 K	599569
39	R 38	205-7501	RES FXD FILM 7X50K	599569
39	R 39	205-7501	RES FXD FILM 7X50K	599569
42	R 40	211-1212	RES FXD FILM 12X1K	599569
6	R 41	200-0104	RES FXD COMP 100K	599569
6	R 42	200-0104	RES FXD COMP 100K	599569
30	R 43	205-1102	RES FXD FILM 11X0K	599569
33	R 44	205-2151	RES FXD FILM 2X15K	599569
30	R 47	205-1102	RES FXD FILM 11X0K	599569
3	R 48	200-0101	RES FXD COMP 100 OHM	599569
24	R 49	200-0561	RES FXD COMP 560 OHM	599569
24	R 50	200-0561	RES FXD COMP 560 OHM	599569
24	R 51	200-0561	RES FXD COMP 560 OHM	599569
14	R 52	200-0223	RES FXD COMP 22K	599569
16	R 53	200-0273	RES FXD COMP 27K	599569
4	R 54	200-0102	RES FXD COMP 1 KOHM	599569
4	R 55	200-0102	RES FXD COMP 1 KOHM	599569
29	R 56	205-1002	RES FXD FILM 10X0K	599569
25	R 57	200-0562	RES FXD COMP 5X6K	599569
25	R 58	200-0562	RES FXD COMP 5X6K	599569
3	R 59	200-0101	RES FXD COMP 100 OHM	599569
40	R 60	205-8251	RES FXD FILM 8X25K	599569
36	R 61	205-5111	RES FXD FILM 5X11K	599569
40	R 62	205-8251	RES FXD FILM 8X25K	599569
29	R 63	205-1002	RES FXD FILM 10X0K	599569
23	R 64	200-0560	RES FXD COMP 56 OHM	599569
18	R 65	200-0391	RES FXD COMP 390 OHM	599569
7	R 66	200-0122	RES FXD COMP 1X2K	599569
30	R 67	205-1102	RES FXD FILM 11X0K	599569
40	R 68	205-8251	RES FXD FILM 8X25K	599569
37	R 69	205-6811	RES FXD FILM 6X81K	599569
12	R 70	200-0221	RES FXD COMP 220 OHM	599569
19	R 71	200-0392	RES FXD COMP 3X9K	599569
4	R 72	200-0102	RES FXD COMP 1 KOHM	599569
28	R 73	200-0821	RES FXD COMP 820 OHM	599569
6	R 74	200-0104	RES FXD COMP 100K	599569
5	R 76	200-0103	RES FXD COMP 10K0	599569
27	R 77	200-0682	RES FXD COMP 6X8K	599569
25	R 78	200-0562	RES FXD COMP 5X6K	599569
26	R 79	200-0563	RES FXD COMP 56K	599569
23	R 81	200-0560	RES FXD COMP 56 OHM	599569
9	R 82	200-0152	RES FXD COMP 1X5K	599569
24	R 83	200-0561	RES FXD COMP 560 OHM	599569
23	R 84	200-0560	RES FXD COMP 56 OHM	599569
30	R 85	205-1102	RES FXD FILM 11X0K	599569
5	R 86	200-0103	RES FXD COMP 10K	599569
5	R 87	200-0103	RES FXD COMP 10K	599569
24	R 88	200-0561	RES FXD COMP 560 OHM	599569
5	R 89	200-0103	RES FXD COMP 10K	599569
22	R 90	200-0472	RES FXD COMP 4X7K	599569
22	R 91	200-0472	RES FXD COMP 4X7K	599569
7	R 92	200-0122	RES FXD COMP 1X2K	599569
7	R 93	200-0122	RES FXD COMP 1X2K	599569
4	R 94	200-0102	RES FXD COMP 1 KOHM	599569
4	R 95	200-0102	RES FXD COMP 1 KOHM	599569
8	R 96	200-0151	RES FXD COMP 150 OHM	599569
8	R 97	200-0151	RES FXD COMP 150 OHM	599569
4	R 98	200-0102	RES FXD COMP 1 KOHM	599569
27	R 99	200-0682	RES FXD COMP 6X8K	599569
12	R 100	200-0221	RES FXD COMP 220 OHM	599569
2	R 101	200-0100	RES FXD COMP 10 OHM	599569
10	R 102	200-0181	RES FXD COMP 180 OHM	599569
67	R 103	3596-0502	RES VAR 5K	599569
2	R 104	200-0100	RES FXD COMP 10 OHM	599569
12	R 105	200-0221	RES FXD COMP 220 OHM	599569
17	R 106	200-0331	RES FXD COMP 330 OHM	599569
23	R 107	200-0560	RES FXD COMP 56 OHM	599569
69	Y 1	3630-0001	CRYSTAL	599569
44	CR 1	801-0096	DIODE IN96A	599569
44	CR 2	801-0096	DIODE IN96A	599569
44	CR 3	801-0096	DIODE IN96A	599569
43	CR 4	800-0914	DIODE IN914	599569
43	CR 5	800-0914	DIODE IN914	599569
45	CR 6	801-0456	DIODE IN456A	599569

ITEM NUMBER	REFERENCE DESIGNATION	TRACOR STOCK NUMBER	DESCRIPTION	STOCK NUMBER USED ON
45	CR 7	801-0456	DIODE IN456A	599569
46	VR 1	801-0752	DIODE IN752A	599569
46	VR 2	801-0752	DIODE IN752A	599569
46	VR 5	801-0752	DIODE IN752A	599569
70	XY 1	3631-0001	HOLDER CRYSTAL	599569
			ASSY PCB PH SHIFTER	599570-0002
1		82	INSULATOR TSTR	599570-0002
2		95-0003	TUBING CLEAR	599570-0002
53		3326-0046	RIVET POP	599570-0002
54		3326-0132	RIVET POP	599570-0002
67		3657-0001	INSULATOR TSTR	599570-0002
68		8819-0022	WIRE BUS BAR 22AWG	599570-0002
73		21472-0003	INK MARKING	599570-0002
84		599360	BOARD PRINTED CIRCUIT	599570-0002
70	C 1	8916-9331	CAP 3X3 MFD 15V	599570-0002
75	C 2	27512-0151	CAP 150 PFD	599570-0002
64	C 3	3632-0011	CAP X8 30 PFD	599570-0002
76	C 4	27512-0180	CAP 18 PFD 500V	599570-0002
77	C 5	27512-0181	CAP 180 PFD 500V	599570-0002
70	C 6	8916-9331	CAP 3X3 MFD 15V	599570-0002
81	C 7	27512-0680	CAP 68 PFD 500V	599570-0002
70	C 9	8916-9331	CAP 3X3 MFD 15V	599570-0002
82	C 10	27512-0820	CAP 82 PFD 500V	599570-0002
80	C 11	27512-0271	CAP 270 PFD 500V	599570-0002
74	C 12	27511-0561	CAP 560 PFD 500V	599570-0002
66	C 13	3655-1001	CAP X001 MFD 100V	599570-0002
66	C 14	3655-1001	CAP X001 MFD 100V	599570-0002
66	C 15	3655-1001	CAP X001 MFD 100V	599570-0002
72	C 16	8918-0560	CAP 56 MFD 6V	599570-0002
66	C 17	3655-1001	CAP X001 MFD 100V	599570-0002
66	C 18	3655-1001	CAP X001 MFD 100V	599570-0002
80	C 19	27512-0271	CAP 270 PFD 500V	599570-0002
69	C 20	8914-0150	CAP 15 MFD 20V	599570-0002
80	C 21	27512-0271	CAP 270 PFD 500V	599570-0002
80	C 22	27512-0271	CAP 270 PFD 500V	599570-0002
80	C 23	27512-0271	CAP 270 PFD 500V	599570-0002
80	C 24	27512-0271	CAP 270 PFD 500V	599570-0002
55	C 25	3403-9103	CAP X01 MFD	599570-0002
55	C 26	3403-9103	CAP X01 MFD	599570-0002
52	C 27	3324-9102	CAP X1 MFD 200V	599570-0002
70	C 28	8916-9331	CAP 3X3 MFD 15V	599570-0002
83	C 29	27513-0471	CAP 470 PFD 500V	599570-0002
80	C 30	27512-0271	CAP 270 PFD 500V	599570-0002
78	C 32	27512-0220	CAP 22 PFD 500V	599570-0002
83	C 33	27513-0471	CAP 470 PFD 500V	599570-0002
70	C 34	8916-9331	CAP 3X3 MFD 15V	599570-0002
80	C 35	27512-0271	CAP 270 PFD 500V	599570-0002
78	C 36	27512-0220	CAP 22 PFD 500V	599570-0002
78	C 37	27512-0220	CAP 22 PFD 500V	599570-0002
80	C 38	27512-0271	CAP 270 PFD 500V	599570-0002
78	C 39	27512-0220	CAP 22 PFD 500V	599570-0002
83	C 40	27513-0471	CAP 470 PFD 500V	599570-0002
83	C 41	27513-0471	CAP 470 PFD 500V	599570-0002
70	C 42	8916-9331	CAP 3X3 MFD 15V	599570-0002
71	C 43	8917-0121	CAP 120 MFD 10V	599570-0002
70	C 44	8916-9331	CAP 3X3 MFD 15V	599570-0002
70	C 45	8916-9331	CAP 3X3 MFD 15V	599570-0002
70	C 46	8916-9331	CAP 3X3 MFD 15V	599570-0002
70	C 47	8916-9331	CAP 3X3 MFD 15V	599570-0002
71	C 48	8917-0121	CAP 120 MFD 10V	599570-0002
71	C 49	8917-0121	CAP 120 MFD 10V	599570-0002
65	L 1	3653-9151	INDUCTOR 1X5 UH VAR	599570-0002
59	L 2	3568-9391	INDUCTOR 3X9 UH	599570-0002
60	L 3	3568-9471	INDUCTOR 4X7 UH	599570-0002
56	L 4	3568-0100	INDUCTOR 10 UH	599570-0002
58	L 5	3568-0270	INDUCTOR 27 UH	599570-0002
58	L 6	3568-0270	INDUCTOR 27 UH	599570-0002
58	L 7	3568-0270	INDUCTOR 27 UH	599570-0002
58	L 8	3568-0270	INDUCTOR 27 UH	599570-0002
58	L 9	3568-0270	INDUCTOR 27 UH	599570-0002
58	L 10	3568-0270	INDUCTOR 27 UH	599570-0002
57	L 11	3568-0101	INDUCTOR 100 UH	599570-0002
57	L 12	3568-0101	INDUCTOR 100 UH	599570-0002
51	P 1	3318-0028	CONN 22 PIN	599570-0002

ITEM NUMBER	REFERENCE DESIGNATION	TRACOR STOCK NUMBER	DESCRIPTION	STOCK NUMBER USED ON
49	Q 1	900-3134	TSTR PNP 2N3134	599570-0002
49	Q 2	900-3134	TSTR PNP 2N3134	599570-0002
50	Q 3	902-0711	TSTR PNP 2N711B	599570-0002
48	Q 4	900-2218	TSTR NPN 2N2218	599570-0002
50	Q 5	902-0711	TSTR PNP 2N711B	599570-0002
50	Q 6	902-0711	TSTR PNP 2N711B	599570-0002
48	Q 7	900-2218	TSTR NPN 2N2218	599570-0002
50	Q 8	902-0711	TSTR PNP 2N711B	599570-0002
48	Q 9	900-2218	TSTR NPN 2N2218	599570-0002
47	Q 10	900-1305	TSTR PNP 2N1305	599570-0002
48	Q 11	900-2218	TSTR NPN 2N2218	599570-0002
47	Q 12	900-1305	TSTR PNP 2N1305	599570-0002
48	Q 13	900-2218	TSTR NPN 2N2218	599570-0002
47	Q 14	900-1305	TSTR PNP 2N1305	599570-0002
48	Q 15	900-2218	TSTR NPN 2N2218	599570-0002
47	Q 16	900-1305	TSTR PNP 2N1305	599570-0002
48	Q 17	900-2218	TSTR NPN 2N2218	599570-0002
47	Q 18	900-1305	TSTR PNP 2N1305	599570-0002
48	Q 19	900-2218	TSTR NPN 2N2218	599570-0002
47	Q 20	900-1305	TSTR PNP 2N1305	599570-0002
48	Q 21	900-2218	TSTR NPN 2N2218	599570-0002
50	Q 22	902-0711	TSTR PNP 2N711B	599570-0002
47	Q 23	900-1305	TSTR PNP 2N1305	599570-0002
47	Q 24	900-1305	TSTR PNP 2N1305	599570-0002
47	Q 25	900-1305	TSTR PNP 2N1305	599570-0002
47	Q 26	900-1305	TSTR PNP 2N1305	599570-0002
47	Q 27	900-1305	TSTR PNP 2N1305	599570-0002
48	Q 28	900-2218	TSTR NPN 2N2218	599570-0002
46	Q 29	900-0708	TSTR NPN 2N708	599570-0002
46	Q 30	900-0708	TSTR NPN 2N708	599570-0002
48	Q 31	900-2218	TSTR NPN 2N2218	599570-0002
46	Q 32	900-0708	TSTR NPN 2N708	599570-0002
46	Q 33	900-0708	TSTR NPN 2N708	599570-0002
46	Q 34	900-0708	TSTR NPN 2N708	599570-0002
46	Q 35	900-0708	TSTR NPN 2N708	599570-0002
48	Q 36	900-2218	TSTR NPN 2N2218	599570-0002
48	Q 37	900-2218	TSTR NPN 2N2218	599570-0002
11	R 1	200-0222	RES FXD COMP 2X2K	599570-0002
13	R 2	200-0271	RES FXD COMP 270 OHM	599570-0002
24	R 3	200-0560	RES FXD COMP 56 OHM	599570-0002
22	R 4	200-0471	RES FXD COMP 470 OHM	599570-0002
27	R 5	200-0681	RES FXD COMP 680 OHM	599570-0002
11	R 6	200-0222	RES FXD COMP 2X2K	599570-0002
3	R 7	200-0100	RES FXD COMP 10 OHM	599570-0002
25	R 8	200-0561	RES FXD COMP 560 OHM	599570-0002
4	R 9	200-0101	RES FXD COMP 100 OHM	599570-0002
17	R 10	200-0331	RES FXD COMP 330 OHM	599570-0002
25	R 11	200-0561	RES FXD COMP 560 OHM	599570-0002
34	R 12	205-8250	RES FXD FILM 825 OHM	599570-0002
32	R 13	205-2370	RES FXD FILM 237 OHM	599570-0002
35	R 14	205-9090	RES FXD FILM 909 OHM	599570-0002
32	R 15	205-2370	RES FXD FILM 237 OHM	599570-0002
13	R 16	200-0271	RES FXD COMP 270 OHM	599570-0002
35	R 17	205-9090	RES FXD FILM 909 OHM	599570-0002
19	R 18	200-0391	RES FXD COMP 390 OHM	599570-0002
37	R 19	211-3161	RES FXD FILM 3X16K	599570-0002
61	R 20	3596-0202	RES VAR 2K 1/2W	599570-0002
41	R 21	211-4221	RES FXD FILM 4X22K	599570-0002
32	R 22	205-2370	RES FXD FILM 237 OHM	599570-0002
19	R 23	200-0391	RES FXD COMP 390 OHM	599570-0002
35	R 24	205-9090	RES FXD FILM 909 OHM	599570-0002
29	R 25	205-1402	RES FXD FILM 14X0K	599570-0002
32	R 26	205-2370	RES FXD FILM 237 OHM	599570-0002
35	R 27	205-9090	RES FXD FILM 909 OHM	599570-0002
19	R 28	200-0391	RES FXD COMP 390 OHM	599570-0002
30	R 29	205-1622	RES FXD FILM 16X2K	599570-0002
22	R 30	200-0471	RES FXD COMP 470 OHM	599570-0002
32	R 31	205-2370	RES FXD FILM 237 OHM	599570-0002
35	R 32	205-9090	RES FXD FILM 909 OHM	599570-0002
33	R 33	205-8062	RES FXD FILM 80X6K	599570-0002
32	R 34	205-2370	RES FXD FILM 237 OHM	599570-0002
19	R 35	200-0391	RES FXD COMP 390 OHM	599570-0002
31	R 36	205-1743	RES FXD FILM 174K	599570-0002
19	R 37	200-0391	RES FXD COMP 390 OHM	599570-0002
26	R 38	200-0564	RES FXD COMP 560K	599570-0002
10	R 39	200-0221	RES FXD COMP 220 OHM	599570-0002
3	R 40	200-0100	RES FXD COMP 10 OHM	599570-0002

ITEM NUMBER	REFERENCE DESIGNATION	T R A C O R STOCK NUMBER	DESCRIPTION	STOCK NUMBER USED ON
34	R 41	205-8250	RES FXD FILM 825 OHM	599570-0002
32	R 42	205-2370	RES FXD FILM 237 OHM	599570-0002
10	R 43	200-0221	RES FXD COMP 220 OHM	599570-0002
19	R 44	200-0391	RES FXD COMP 390 OHM	599570-0002
33	R 45	205-8062	RES FXD FILM 80X6K	599570-0002
35	R 46	205-9090	RES FXD FILM 909 OHM	599570-0002
32	R 47	205-2370	RES FXD FILM 237 OHM	599570-0002
19	R 48	200-0391	RES FXD COMP 390 OHM	599570-0002
31	R 49	205-1743	RES FXD FILM 174K	599570-0002
19	R 50	200-0391	RES FXD COMP 390 OHM	599570-0002
22	R 51	200-0471	RES FXD COMP 470 OHM	599570-0002
9	R 52	200-0151	RES FXD COMP 150 OHM	599570-0002
19	R 53	200-0391	RES FXD COMP 390 OHM	599570-0002
11	R 54	200-0222	RES FXD COMP 2X2K	599570-0002
28	R 55	200-0823	RES FXD COMP 82K	599570-0002
28	R 56	200-0823	RES FXD COMP 82K	599570-0002
15	R 57	200-0273	RES FXD COMP 27K	599570-0002
12	R 58	200-0223	RES FXD COMP 22K	599570-0002
12	R 59	200-0223	RES FXD COMP 22K	599570-0002
5	R 60	200-0102	RES FXD COMP 1X0K	599570-0002
7	R 61	200-0122	RES FXD COMP 1X2K	599570-0002
5	R 62	200-0102	RES FXD COMP 1X0K	599570-0002
15	R 63	200-0273	RES FXD COMP 27K	599570-0002
23	R 64	200-0472	RES FXD COMP 4X7K	599570-0002
11	R 65	200-0222	RES FXD COMP 2X2K	599570-0002
23	R 66	200-0472	RES FXD COMP 4X7K	599570-0002
10	R 67	200-0221	RES FXD COMP 220 OHM	599570-0002
23	R 68	200-0472	RES FXD COMP 4X7K	599570-0002
10	R 69	200-0221	RES FXD COMP 220 OHM	599570-0002
10	R 70	200-0221	RES FXD COMP 220 OHM	599570-0002
8	R 71	200-0123	RES FXD COMP 12K	599570-0002
11	R 72	200-0222	RES FXD COMP 2X2K	599570-0002
36	R 73	211-1001	RES FXD FILM 1X0K	599570-0002
38	R 74	211-3481	RES FXD FILM 3X48K	599570-0002
38	R 75	211-3481	RES FXD FILM 3X48K	599570-0002
36	R 76	211-1001	RES FXD FILM 1X0K	599570-0002
22	R 77	200-0471	RES FXD COMP 470 OHM	599570-0002
19	R 78	200-0391	RES FXD COMP 390 OHM	599570-0002
20	R 79	200-0392	RES FXD COMP 3X9K	599570-0002
18	R 80	200-0332	RES FXD COMP 3X3K	599570-0002
42	R 81	211-7500	RES FXD FILM 750 OHM	599570-0002
38	R 82	211-3481	RES FXD FILM 3X48K	599570-0002
42	R 85	211-7500	RES FXD FILM 750 OHM	599570-0002
38	R 86	211-3481	RES FXD FILM 3X48K	599570-0002
40	R 87	211-3489	RES FXD FILM 34X8 OHM	599570-0002
42	R 88	211-7500	RES FXD FILM 750 OHM	599570-0002
20	R 89	200-0392	RES FXD COMP 3X9K	599570-0002
22	R 90	200-0471	RES FXD COMP 470 OHM	599570-0002
38	R 91	211-3481	RES FXD FILM 3X48K	599570-0002
38	R 92	211-3481	RES FXD FILM 3X48K	599570-0002
38	R 93	211-3481	RES FXD FILM 3X48K	599570-0002
36	R 94	211-1001	RES FXD FILM 1X0K	599570-0002
40	R 95	211-3489	RES FXD FILM 34X8 OHM	599570-0002
18	R 96	200-0332	RES FXD COMP 3X3K	599570-0002
18	R 97	200-0332	RES FXD COMP 3X3K	599570-0002
36	R 98	211-1001	RES FXD FILM 1X0K	599570-0002
6	R 99	200-0103	RES FXD COMP 10K	599570-0002
18	R 100	200-0332	RES FXD COMP 3X3K	599570-0002
42	R 101	211-7500	RES FXD FILM 750 OHM	599570-0002
38	R 102	211-3481	RES FXD FILM 3X48K	599570-0002
26	R 103	200-0564	RES FXD COMP 560K	599570-0002
6	R 104	200-0103	RES FXD COMP 10K	599570-0002
20	R 105	200-0392	RES FXD COMP 3X9K	599570-0002
20	R 106	200-0392	RES FXD COMP 3X9K	599570-0002
38	R 107	211-3481	RES FXD FILM 3X48K	599570-0002
38	R 108	211-3481	RES FXD FILM 3X48K	599570-0002
38	R 109	211-3481	RES FXD FILM 3X48K	599570-0002
38	R 110	211-3481	RES FXD FILM 3X48K	599570-0002
19	R 111	200-0391	RES FXD COMP 390 OHM	599570-0002
19	R 112	200-0391	RES FXD COMP 390 OHM	599570-0002
14	R 113	200-0272	RES FXD COMP 2X7K	599570-0002
16	R 114	200-0330	RES FXD COMP 33 OHM	599570-0002
21	R 115	200-0470	RES FXD COMP 47 OHM	599570-0002
62	Y 1	3630-0002	CRYSTAL	599570-0002
79	3 8	27512-0221	CAP 220 PFD 500V	599570-0002
78	3 30	27512-0220	CAP 22 PFD 500V	599570-0002
43	CR 1	800-0914	DIODE IN914	599570-0002

ITEM NUMBER	REFERENCE DESIGNATION		T R A C O R STOCK NUMBER	DESCRIPTION	STOCK NUMBER USED ON
43	CR	2	800-0914	DIODE IN914	599570-0002
43	CR	3	800-0914	DIODE IN914	599570-0002
44	CR	4	801-0096	DIODE IN96A	599570-0002
44	CR	5	801-0096	DIODE IN96A	599570-0002
43	CR	6	800-0914	DIODE IN914	599570-0002
43	CR	7	800-0914	DIODE IN914	599570-0002
43	CR	8	800-0914	DIODE IN914	599570-0002
43	CR	9	800-0914	DIODE IN914	599570-0002
44	CR	10	801-0096	DIODE IN96A	599570-0002
44	CR	11	801-0096	DIODE IN96A	599570-0002
45	VR	1	801-0753	DIODE IN753A	599570-0002
45	VR	2	801-0753	DIODE IN753A	599570-0002
45	VR	3	801-0753	DIODE IN753A	599570-0002
45	VR	4	801-0753	DIODE IN753A	599570-0002
63	XY	1	3631-0001	HOLDER CRYSTAL	599570-0002
				ASSY PCB POWER SUPPLY	599721
1			82	PAD MTG TSTR	599721
26			3657-0013	PAD MTG TSTR	599721
28			3878-0001	HEATSINK TO 5	599721
30			599720	BOARD PRINTED CIRCUIT	599721
29	C	1	8916-0121	CAPACITOR 120 MFD	599721
29	C	2	8916-0121	CAPACITOR 120 MFD	599721
25	C	3	3340-0100	CAPACITOR 10 MFD	599721
23	C	4	3324-9104	CAPACITOR X001 MFD	599721
24	C	5	3324-9224	CAPACITOR X0022 MFD	599721
22	Q	3	900-3708	TSTR 2N3708	599721
22	Q	4	900-3708	TSTR 2N3708	599721
20	Q	5	900-3702	TSTR 2N3702	599721
20	Q	6	900-3702	TSTR 2N3702	599721
21	Q	7	900-3705	TSTR 2N3705	599721
19	Q	8	900-3134	TSTR 2N3134	599721
18	Q	9	900-2270	TSTR 2N2270	599721
27	R	3	3838-0101	RESISTOR VARIABLE	599721
2	R	4	205-9090	RESISTOR 909 OHM 1/2W	599721
3	R	5	208-0101	RESISTOR 100 OHM 1/2W	599721
6	R	6	208-0152	RESISTOR 1X5K 1/2W	599721
2	R	7	205-9090	RESISTOR 909 OHM 1/2W	599721
2	R	8	205-9090	RESISTOR 909 OHM 1/2W	599721
6	R	9	208-0152	RESISTOR 1X5K 1/2W	599721
13	R	10	209-0101	RESISTOR 100 OHM 1W	599721
10	R	11	208-0332	RESISTOR 3X3K 1/2W	599721
7	R	12	208-0222	RESISTOR 2X2K 1/2W	599721
12	R	13	208-0821	RESISTOR 820 OHM 1/2W	599721
8	R	14	208-0271	RESISTOR 270 OHM 1/2W	599721
5	R	15	208-0120	RESISTOR 12 OHM 1/2W	599721
4	R	16	208-0102	RESISTOR 1K 1/2W	599721
14	R	17	210-0101	RESISTOR 100 OHM 2W	599721
11	R	18	208-0471	RESISTOR 470 OHM 1/2W	599721
9	R	19	208-0331	RESISTOR 330 OHM 1/2W	599721
4	R	20	208-0102	RESISTOR 1K 1/2W	599721
3	R	21	208-0101	RESISTOR 100 OHM 1/2W	599721
15	CR	1	800-4002	DIODE 1N4002	599721
15	CR	2	800-4002	DIODE 1N4002	599721
15	CR	3	800-4002	DIODE 1N4002	599721
15	CR	4	800-4002	DIODE 1N4002	599721
15	CR	5	800-4002	DIODE 1N4002	599721
15	CR	6	800-4002	DIODE 1N4002	599721
15	CR	7	800-4002	DIODE 1N4002	599721
15	CR	8	800-4002	DIODE 1N4002	599721
17	VR	1	801-0753	DIODE ZENER 1N753A	599721
16	VR	2	801-0746	DIODE ZENER 1N746A	599721
				WIRING HARNESS ASSY	599722
1			703-0010	1N WIRE 18 AWG BLK	599722
2			703-0110	1N WIRE 18 AWG BRN	599722
3			703-0210	1N WIRE 18 AWG RED	599722
4			703-0310	1N WIRE 18 AWG ORN	599722
5			703-0410	1N WIRE 18 AWG YEL	599722
6			703-0510	1N WIRE 18 AWG GRN	599722
7			703-0610	1N WIRE 18 AWG BLUE	599722
8			703-0710	1N WIRE 18 AWG VIO	599722
9			703-0810	1N WIRE 18 AWG GRAY	599722

ITEM NUMBER	REFERENCE DESIGNATION	TRACOR STOCK NUMBER	DESCRIPTION	STOCK NUMBER USED ON
10		703-0900	1N WIRE 18 AWG WHT/BL	599722
11		703-0905	1N WIRE 18 AWG WHT/GR	599722
12		703-0908	1N WIRE 18 AWG WHT/GR	599722
13		703-0910	1N WIRE 18 AWG WHT	599722
14		705-0010	1N WIRE 22 AWG BLK	599722
15		705-0210	1N WIRE 22 AWG RED	599722
16		705-0510	1N WIRE 22 AWG GRN	599722
17		705-0902	1N WIRE 22 AWG WHT/RE	599722
18		705-0905	1N WIRE 22 AWG WHT/GR	599722
19		705-0906	1N WIRE 22 AWG WHT/BL	599722
20		3389-0011	CORD LACING	599722
24		8819-0018	1N WIRE 18 AWG BUS	599722
25	C 9	8914-0101	CAP 100 MFD 20 V	599722
25	C 10	8914-0101	CAP 100 MFD 20 V	599722
22	E 1	3486-0001	LUG SOLDER NO 4	599722
23	J 1	3628-0022	CONN 22 PIN	599722
21	P 2	3394-0004	CONN 24P	599722
			ASSY POWER SUPPLY	599723
2		175-0016	SCR BIND HD 4 40X1/4	599723
3		175-0020	SCR BIND HD 4 40X5/16	599723
4		175-0024	SCR BIND HD 4 40X3/8	599723
5		175-0032	SCR BIND HD 4 40X1/2	599723
6		177-0016	SCR BIND HD 6 32X1/4	599723
7		177-0020	SCR BIND HD 6 32X5/16	599723
8		365-0024	SCREW HEX HD 4 40X3/8	599723
9		561-0024	SCR HEX SOC 6 32X3/8	599723
10		611-0053	FERRULES	599723
11		612-0003	HANDLE	599723
12		617-0256	WASHER FLAT NO 4	599723
13		617-0267	WASHER FLAT NO 6	599723
14		620-0123	WASHER LOCK IT NO 4	599723
15		620-0125	WASHER LOCK IT NO 6	599723
16		620-0126	WASHER LOCK IT NO 8	599723
17		639-0006	WASHER NYLON NO 4	599723
18		649-0074	NUT 4 40	599723
19		649-0114	NUT 6 32	599723
20		649-0134	NUT 8 32	599723
21		3326-0042	RIVET POP	599723
22		3331-0022	NUT CLINCH 4 40	599723
23		3331-0032	NUT CLINCH 6 32	599723
29		3455-0773	CLAMP CABLE	599723
30		3475-0001	SCREW CAPTIVE 6 32	599723
36		5057-0032	STANDOFF 4 40X1/2	599723
37		5067-0100	STANDOFF 6 32X1	599723
39		8145	CHANNEL BOTTOM	599723
40		599028	RAIL TOP	599723
41		599033	BRKT COMP MTG	599723
42		599038	COVER	599723
43		599060	BRKT CAP MTG	599723
46		599724	PANEL REAR GOLD	599723
47		599725	PANEL PAINTED FRONT	599723
45	A 1	599722	ASSY WIRING HARNESS	599723
44	A 2	599721	ASSY PCB	599723
31	C 6	3481-0014	CAP 1000 MFD 50V	599723
31	C 7	3481-0014	CAP 1000 MFD 50V	599723
26	C 8	3408-9502	CAP X5 MFD	599723
25	F 1	3346-9501	FUSE 5A FAST ACTING	599723
24	F 2	3346-9201	FUSE 2A FAST ACTING	599723
32	F 3	3487-9372	FUSE 3/8A SLO BLOW	599723
32	F 4	3487-9372	FUSE 3/8A SLO BLOW	599723
35	S 1	3490-0002	SWITCH DPST	599723
35	S 2	3490-0002	SWITCH DPST	599723
38	T 1	9008	TRANSFORMER	599723
1	DS 1	87-0364	LAMP MINAT NO 1829	599723
1	DS 2	87-0364	LAMP MINAT NO 1829	599723
34	XF 1	3489-0002	HOLDER FUSE	599723
34	XF 2	3489-0002	HOLDER FUSE	599723
33	XF 3	3488-0002	HOLDER FUSE	599723
33	XF 4	3488-0002	HOLDER FUSE	599723
28	XDS 1	3440-2500	HOLDER INDICATOR LAMP	599723
27	XDS 2	3440-2200	HOLDER INDICATOR LAMP	599723

ITEM NUMBER	REFERENCE DESIGNATION	TRACOR STOCK NUMBER	DESCRIPTION	STOCK NUMBER USED ON
			BOARD PC ASSY REF DIV	599735
1		599817	BOARD PC	599735
7		3326-0046	RIVET POP	599735
8		3657-0001	INSULATOR TSTR	599735
9		8819-0022	BUS WIRE NO 22 AWG	599735
38	C 1	3924-0470	CAP 47PF	599735
38	C 2	3924-0470	CAP 47PF	599735
38	C 3	3924-0470	CAP 47PF	599735
38	C 4	3924-0470	CAP 47PF	599735
38	C 5	3924-0470	CAP 47PF	599735
38	C 6	3924-0470	CAP 47PF	599735
38	C 7	3924-0470	CAP 47PF	599735
38	C 8	3924-0470	CAP 47PF	599735
38	C 9	3924-0470	CAP 47PF	599735
38	C 10	3924-0470	CAP 47PF	599735
41	C 11	21485-9101	CAP 1X0MFD 35V	599735
41	C 12	21485-9101	CAP 1X0MFD 35V	599735
37	C 13	3655-1001	CAP X001 1PC	599735
37	C 14	3655-1001	CAP X001 1PC	599735
37	C 15	3655-1001	CAP X001 1PC	599735
37	C 16	3655-1001	CAP X001 1PC	599735
37	C 17	3655-1001	CAP X001 1PC	599735
41	C 19	21485-9101	CAP 1X0MFD 35V	599735
35	C 20	3319-0102	CAP 1000PF	599735
40	C 21	8918-0331	CAP 330MFD 6V	599735
41	C 22	21485-9101	CAP 1X0MFD 35V	599735
36	C 23	3324-9103	CAP X01MFD	599735
39	L 1	3925-0004	INDUCTOR BEAD	599735
39	L 2	3925-0004	INDUCTOR BEAD	599735
39	L 3	3925-0004	INDUCTOR BEAD	599735
39	L 4	3925-0004	INDUCTOR BEAD	599735
39	L 5	3925-0004	INDUCTOR BEAD	599735
39	L 6	3925-0004	INDUCTOR BEAD	599735
39	L 7	3925-0004	INDUCTOR BEAD	599735
39	L 8	3925-0004	INDUCTOR BEAD	599735
39	L 9	3925-0004	INDUCTOR BEAD	599735
39	L 10	3925-0004	INDUCTOR BEAD	599735
39	L 11	3925-0004	INDUCTOR BEAD	599735
39	L 12	3925-0004	INDUCTOR BEAD	599735
39	L 13	3925-0004	INDUCTOR BEAD	599735
39	L 14	3925-0004	INDUCTOR BEAD	599735
39	L 15	3925-0004	INDUCTOR BEAD	599735
34	P 1	3318-0028	CONN PCB	599735
32	Q 1	900-3646	TRANSISTOR 2N3646	599735
32	Q 2	900-3646	TRANSISTOR 2N3646	599735
32	Q 3	900-3646	TRANSISTOR 2N3646	599735
32	Q 4	900-3646	TRANSISTOR 2N3646	599735
32	Q 5	900-3646	TRANSISTOR 2N3646	599735
32	Q 6	900-3646	TRANSISTOR 2N3646	599735
32	Q 7	900-3646	TRANSISTOR 2N3646	599735
32	Q 8	900-3646	TRANSISTOR 2N3646	599735
32	Q 9	900-3646	TRANSISTOR 2N3646	599735
32	Q 10	900-3646	TRANSISTOR 2N3646	599735
33	Q 11	900-3702	TRANSISTOR 2N3702	599735
33	Q 12	900-3702	TRANSISTOR 2N3702	599735
33	Q 14	900-3702	TRANSISTOR 2N3702	599735
31	Q 15	900-0708	TRANSISTOR 2N708	599735
33	Q 16	900-3702	TRANSISTOR 2N3702	599735
31	Q 17	900-0708	TRANSISTOR 2N708	599735
33	Q 18	900-3702	TRANSISTOR 2N3702	599735
31	Q 19	900-0708	TRANSISTOR 2N708	599735
33	Q 20	900-3702	TRANSISTOR 2N3702	599735
31	Q 21	900-0708	TRANSISTOR 2N708	599735
33	Q 22	900-3702	TRANSISTOR 2N3702	599735
31	Q 23	900-0708	TRANSISTOR 2N708	599735
32	Q 24	900-3646	TRANSISTOR 2N3646	599735
13	R 1	200-0103	RES 10K	599735
13	R 2	200-0103	RES 10K	599735
12	R 3	200-0102	RES 1K	599735
21	R 4	200-0822	RES 8X2K	599735
13	R 5	200-0103	RES 10K	599735
13	R 6	200-0103	RES 10K	599735
21	R 7	200-0822	RES 8X2K	599735
12	R 8	200-0102	RES 1K	599735
13	R 9	200-0103	RES 10K	599735
13	R 10	200-0103	RES 10K	599735

ITEM NUMBER	REFERENCE DESIGNATION	T R A C O R STOCK NUMBER	DESCRIPTION	STOCK NUMBER USED ON
13	R 11	200-0103	RES 10K	599735
13	R 12	200-0103	RES 10K	599735
12	R 13	200-0102	RES 1K	599735
21	R 14	200-0822	RES 8X2K	599735
13	R 15	200-0103	RES 10K	599735
13	R 16	200-0103	RES 10K	599735
21	R 17	200-0822	RES 8X2K	599735
12	R 18	200-0102	RES 1K	599735
13	R 19	200-0103	RES 10K	599735
13	R 20	200-0103	RES 10K	599735
13	R 21	200-0103	RES 10K	599735
12	R 22	200-0102	RES 1K	599735
21	R 23	200-0822	RES 8X2K	599735
13	R 24	200-0103	RES 10K	599735
13	R 25	200-0103	RES 10K	599735
21	R 26	200-0822	RES 8X2K	599735
12	R 27	200-0102	RES 1K	599735
13	R 28	200-0103	RES 10K	599735
18	R 29	200-0471	RES 470 OHMS	599735
13	R 30	200-0103	RES 10K	599735
13	R 31	200-0103	RES 10K	599735
12	R 32	200-0102	RES 1K	599735
21	R 33	200-0822	RES 8X2K	599735
13	R 34	200-0103	RES 10K	599735
13	R 35	200-0103	RES 10K	599735
21	R 36	200-0822	RES 8X2K	599735
12	R 37	200-0102	RES 1K	599735
13	R 38	200-0103	RES 10K	599735
13	R 39	200-0103	RES 10K	599735
10	R 40	200-0100	RES 10 OHMS	599735
13	R 41	200-0103	RES 10K	599735
12	R 42	200-0102	RES 1K	599735
21	R 43	200-0822	RES 8X2K	599735
13	R 44	200-0103	RES 10K	599735
13	R 45	200-0103	RES 10K	599735
21	R 46	200-0822	RES 8X2K	599735
12	R 47	200-0102	RES 1K	599735
13	R 48	200-0103	RES 10K	599735
13	R 49	200-0103	RES 10K	599735
13	R 50	200-0103	RES 10K	599735
13	R 51	200-0103	RES 10K	599735
14	R 52	200-0152	RES 1X5K	599735
15	R 53	200-0222	RES 2X2K	599735
14	R 54	200-0152	RES 1X5K	599735
20	R 55	200-0820	RES 82 OHMS	599735
13	R 56	200-0103	RES 10K	599735
20	R 57	200-0820	RES 82 OHMS	599735
13	R 58	200-0103	RES 10K	599735
15	R 59	200-0222	RES 2X2K	599735
10	R 60	200-0100	RES 10 OHMS	599735
13	R 61	200-0103	RES 10K	599735
13	R 62	200-0103	RES 10K	599735
18	R 63	200-0471	RES 470 OHMS	599735
13	R 64	200-0103	RES 10K	599735
11	R 65	200-0101	RES 100 OHMS	599735
25	R 66	212-2370	RES 237 OHMS	599735
13	R 67	200-0103	RES 10K	599735
16	R 68	200-0270	RES 27 OHMS	599735
23	R 69	205-1784	RES 1X78 MEGO	599735
25	R 70	212-2370	RES 237 OHMS	599735
29	R 71	212-9090	RES 909 OHMS	599735
16	R 72	200-0270	RES 27 OHMS	599735
13	R 73	200-0103	RES 10K	599735
23	R 74	205-1784	RES 1X78 MEGO	599735
25	R 75	212-2370	RES 237 OHMS	599735
29	R 76	212-9090	RES 909 OHMS	599735
16	R 77	200-0270	RES 27 OHMS	599735
13	R 78	200-0103	RES 10K	599735
26	R 79	212-3483	RES 348K	599735
25	R 80	212-2370	RES 237 OHMS	599735
29	R 81	212-9090	RES 909 OHMS	599735
16	R 82	200-0270	RES 27 OHMS	599735
13	R 83	200-0103	RES 10K	599735
28	R 84	212-6812	RES 68X1K	599735
25	R 85	212-2370	RES 237 OHMS	599735
29	R 86	212-9090	RES 909 OHMS	599735
16	R 87	200-0270	RES 27 OHMS	599735

ITEM NUMBER	REFERENCE DESIGNATION	TRACOR STOCK NUMBER	DESCRIPTION	STOCK NUMBER USED ON
19	R 88	200-0562	RES 5X6K	599735
24	R 89	212-1212	RES 12X1K	599735
27	R 90	212-4640	RES 464 OHMS	599735
17	R 91	200-0330	RES 33 OHMS	599735
12	R 92	200-0102	RES 1K	599735
17	R 93	200-0330	RES 33 OHMS	599735
18	R 94	200-0471	RES 470 OHMS	599735
18	R 95	200-0471	RES 470 OHMS	599735
18	R 96	200-0471	RES 470 OHMS	599735
11	R 97	200-0101	RES 100 OHMS	599735
11	R 98	200-0101	RES 100 OHMS	599735
18	R 99	200-0471	RES 470 OHMS	599735
22	R 100	205-1694	RES 1X69 MEGO	599735
30	CR 1	800-0914	DIODE 1N914	599735
30	CR 2	800-0914	DIODE 1N914	599735
30	CR 3	800-0914	DIODE 1N914	599735
30	CR 4	800-0914	DIODE 1N914	599735
30	CR 5	800-0914	DIODE 1N914	599735
30	CR 6	800-0914	DIODE 1N914	599735
30	CR 7	800-0914	DIODE 1N914	599735
30	CR 8	800-0914	DIODE 1N914	599735
30	CR 9	800-0914	DIODE 1N914	599735
30	CR 10	800-0914	DIODE 1N914	599735
			BOARD PC ASSY P D/V	599736
1		599812	BOARD PC	599736
2		8819-0022	BUS WIRE NO 22 AWG	599736
6		620-0123	WASH LOCK NO 4	599736
7		175-0016	SCR 4 40 1/4 BH	599736
8		705-0410	WIRE 22AWG YEL	599736
9		5047-0024	STANDOFF HEX 6 32 3/8	599736
10		599815	SHIELD VCO	599736
11		3326-0046	RIVET POP	599736
13		82	TRANSIPAD	599736
14		3657-0001	TRANSIPAD	599736
15		3657-0011	TRANSIPAD	599736
65	C 1	3924-0470	CAP 47PF	599736
65	C 2	3924-0470	CAP 47PF	599736
65	C 3	3924-0470	CAP 47PF	599736
65	C 4	3924-0470	CAP 47PF	599736
65	C 5	3924-0470	CAP 47PF	599736
65	C 6	3924-0470	CAP 47PF	599736
69	C 7	21485-9101	CAP 1MFD	599736
60	C 8	3611-9101	CAP 1X0MFD	599736
69	C 9	21485-9101	CAP 1MFD	599736
56	C 10	3324-9102	CAP 0X1MFD	599736
61	C 11	3611-9682	CAP X68MFD	599736
71	C 12	27512-0221	CAP 220PF	599736
64	C 13	3923-0037	CAP VAR 9/35PF	599736
70	C 14	27512-0131	CAP 130PF	599736
55	C 15	3319-0821	CAP 820PF	599736
64	C 16	3923-0037	CAP VAR 9/35PF	599736
69	C 17	21485-9101	CAP 1MFD	599736
67	C 18	8917-0121	CAP 120MFD	599736
57	C 19	3324-9394	CAP X0039MFD	599736
69	C 20	21485-9101	CAP 1MFD	599736
68	C 21	8918-0331	CAP 330 MFD 6V	599736
66	L 1	3925-0004	INDUCTOR BEAD	599736
66	L 2	3925-0004	INDUCTOR BEAD	599736
59	L 3	3568-0120	INDUCTOR 12UH	599736
66	L 4	3925-0004	INDUCTOR BEAD	599736
66	L 5	3925-0004	INDUCTOR BEAD	599736
54	P 1	3318-0028	CONN PCB	599736
50	Q 1	900-3646	TRANSISTOR 2N3646	599736
50	Q 2	900-3646	TRANSISTOR 2N3646	599736
50	Q 3	900-3646	TRANSISTOR 2N3646	599736
50	Q 4	900-3646	TRANSISTOR 2N3646	599736
50	Q 5	900-3646	TRANSISTOR 2N3646	599736
50	Q 6	900-3646	TRANSISTOR 2N3646	599736
50	Q 7	900-3646	TRANSISTOR 2N3646	599736
49	Q 8	900-0708	TRANSISTOR 2N708	599736
53	Q 9	900-3906	TRANSISTOR 2N3906	599736
52	Q 10	900-3705	TRANSISTOR 2N3705	599736
52	Q 11	900-3705	TRANSISTOR 2N3705	599736
52	Q 12	900-3705	TRANSISTOR 2N3705	599736

ITEM NUMBER	REFERENCE DESIGNATION	T R A C O R STOCK NUMBER	DESCRIPTION	STOCK NUMBER USED ON
58	Q 13	3431-0003	DUAL TSTR GE12A8	599736
52	Q 14	900-3705	TRANSISTOR 2N3705	599736
51	Q 15	900-3702	TRANSISTOR 2N3702	599736
51	Q 16	900-3702	TRANSISTOR 2N3702	599736
50	Q 17	900-3646	TRANSISTOR 2N3646	599736
51	Q 18	900-3702	TRANSISTOR 2N3702	599736
51	Q 19	900-3702	TRANSISTOR 2N3702	599736
48	Q 20	900-0697	TRANSISTOR 2N697	599736
51	Q 21	900-3702	TRANSISTOR 2N3702	599736
51	Q 22	900-3702	TRANSISTOR 2N3702	599736
48	Q 23	900-0697	TRANSISTOR 2N697	599736
50	Q 24	900-3646	TRANSISTOR 2N3646	599736
51	Q 25	900-3702	TRANSISTOR 2N3702	599736
17	R 1	200-0102	RES 1.0K	599736
17	R 2	200-0102	RES 1.0K	599736
17	R 3	200-0102	RES 1.0K	599736
17	R 4	200-0102	RES 1.0K	599736
17	R 5	200-0102	RES 1.0K	599736
17	R 6	200-0102	RES 1.0K	599736
30	R 7	200-0822	RES 8X2K	599736
30	R 8	200-0822	RES 8X2K	599736
30	R 9	200-0822	RES 8X2K	599736
30	R 10	200-0822	RES 8X2K	599736
30	R 11	200-0822	RES 8X2K	599736
30	R 12	200-0822	RES 8X2K	599736
18	R 13	200-0103	RES 10K	599736
18	R 14	200-0103	RES 10K	599736
18	R 15	200-0103	RES 10K	599736
18	R 16	200-0103	RES 10K	599736
17	R 17	200-0102	RES 1.0K	599736
18	R 18	200-0103	RES 10K	599736
18	R 19	200-0103	RES 10K	599736
18	R 20	200-0103	RES 10K	599736
18	R 21	200-0103	RES 10K	599736
18	R 22	200-0103	RES 10K	599736
18	R 23	200-0103	RES 10K	599736
18	R 24	200-0103	RES 10K	599736
18	R 25	200-0103	RES 10K	599736
18	R 26	200-0103	RES 10K	599736
18	R 27	200-0103	RES 10K	599736
18	R 28	200-0103	RES 10K	599736
20	R 29	200-0123	RES 12K	599736
18	R 30	200-0103	RES 10K	599736
18	R 31	200-0103	RES 10K	599736
18	R 32	200-0103	RES 10K	599736
18	R 33	200-0103	RES 10K	599736
39	R 34	212-2371	RES 2X37K	599736
16	R 35	200-0100	RES 10 OHMS	599736
31	R 36	200-9271	RES 2X7 OHMS	599736
45	R 37	212-6810	RES 681 OHMS	599736
35	R 38	212-1212	RES 12X1K	599736
37	R 39	212-2152	RES 21X5K	599736
32	R 40	212-1003	RES 100K	599736
36	R 41	212-2151	RES 2X15K	599736
36	R 42	212-2151	RES 2X15K	599736
18	R 43	200-0103	RES 10K	599736
33	R 44	212-1101	RES 1X10K	599736
39	R 45	212-2371	RES 2X37K	599736
18	R 46	200-0103	RES 10K	599736
18	R 47	200-0103	RES 10K	599736
62	R 48	4188-0104	RES 100K VAR	599736
43	R 49	212-5112	RES 51X1K	599736
24	R 50	200-0221	RES 220 OHMS	599736
42	R 51	212-4221	RES 4X22K	599736
42	R 52	212-4221	RES 4X22K	599736
24	R 53	200-0221	RES 220 OHMS	599736
17	R 54	200-0102	RES 1.0K	599736
24	R 55	200-0221	RES 220 OHMS	599736
16	R 56	200-0100	RES 10 OHMS	599736
41	R 57	212-4220	RES 422 OHMS	599736
41	R 58	212-4220	RES 422 OHMS	599736
36	R 59	212-2151	RES 2X15K	599736
44	R 60	212-6192	RES 61X9K	599736
44	R 61	212-6192	RES 61X9K	599736
46	R 62	212-7500	RES 750 OHMS	599736
18	R 63	200-0103	RES 10K	599736
40	R 64	212-2611	RES 2X61K	599736

ITEM NUMBER	REFERENCE DESIGNATION	TRACOR STOCK NUMBER	DESCRIPTION	STOCK NUMBER USED ON
26	R 65	200-0331	RES 330 OHMS	599736
27	R 66	200-0470	RES 47 OHMS	599736
26	R 67	200-0331	RES 330 OHMS	599736
63	R 68	3838-0201	RES 200 OHMS VAR	599736
19	R 69	200-0122	RES 1X2K	599736
46	R 70	212-7500	RES 750 OHMS	599736
25	R 71	200-0222	RES 2X2K	599736
16	R 72	200-0100	RES 10 OHMS	599736
28	R 73	200-0560	RES 56 OHMS	599736
18	R 74	200-0103	RES 10K	599736
38	R 75	212-2370	RES 237 OHMS	599736
24	R 76	200-0221	RES 220 OHMS	599736
31	R 77	200-9271	RES 2X7 OHMS	599736
29	R 78	200-0681	RES 680 OHMS	599736
16	R 79	200-0100	RES 10 OHMS	599736
24	R 80	200-0221	RES 220 OHMS	599736
34	R 81	212-1103	RES 110K	599736
21	R 82	200-0150	RES 15 OHMS	599736
22	R 83	200-0151	RES 150 OHMS	599736
17	R 84	200-0102	RES 1.0K	599736
47	CR 1	800-0914	DIODE 1N914	599736
47	CR 2	800-0914	DIODE 1N914	599736
47	CR 3	800-0914	DIODE 1N914	599736
47	CR 4	800-0914	DIODE 1N914	599736
47	CR 5	800-0914	DIODE 1N914	599736
47	CR 6	800-0914	DIODE 1N914	599736
47	CR 7	800-0914	DIODE 1N914	599736
47	CR 8	800-0914	DIODE 1N914	599736
47	CR 9	800-0914	DIODE 1N914	599736
47	CR 10	800-0914	DIODE 1N914	599736
47	CR 11	800-0914	DIODE 1N914	599736
47	CR 12	800-0914	DIODE 1N914	599736
			BOARD PC ASSY 1ST DEC	599737
1		599784	BOARD PC	599737
2		3326-0046	RIVET POP	599737
7		8819-0022	BUS WIRE NO 22 AWG	599737
23		3657-0001	INSULATOR TSTR	599737
22	C 1	3319-0221	CAP 220PF	599737
24	C 2	3924-0470	CAP 47PF	599737
24	C 3	3924-0470	CAP 47PF	599737
24	C 4	3924-0470	CAP 47PF	599737
24	C 5	3924-0470	CAP 47PF	599737
24	C 6	3924-0470	CAP 47PF	599737
24	C 7	3924-0470	CAP 47PF	599737
24	C 8	3924-0470	CAP 47PF	599737
24	C 9	3924-0470	CAP 47PF	599737
26	C 10	21485-9101	CAP 1MFD 35V	599737
26	C 11	21485-9101	CAP 1MFD 35V	599737
24	C 12	3924-0470	CAP 47PF	599737
24	C 13	3924-0470	CAP 47PF	599737
22	C 14	3319-0221	CAP 220PF	599737
26	C 15	21485-9101	CAP 1MFD 35V	599737
25	L 1	3925-0004	INDUCTOR BEAD	599737
25	L 2	3925-0004	INDUCTOR BEAD	599737
25	L 3	3925-0004	INDUCTOR BEAD	599737
25	L 4	3925-0004	INDUCTOR BEAD	599737
25	L 5	3925-0004	INDUCTOR BEAD	599737
25	L 6	3925-0004	INDUCTOR BEAD	599737
25	L 7	3925-0004	INDUCTOR BEAD	599737
25	L 8	3925-0004	INDUCTOR BEAD	599737
25	L 9	3925-0004	INDUCTOR BEAD	599737
25	L 10	3925-0004	INDUCTOR BEAD	599737
25	L 11	3925-0004	INDUCTOR BEAD	599737
25	L 12	3925-0004	INDUCTOR BEAD	599737
21	P 1	3318-0028	CONN PCB	599737
20	Q 1	900-3646	TRANSISTOR 2N3646	599737
20	Q 2	900-3646	TRANSISTOR 2N3646	599737
20	Q 3	900-3646	TRANSISTOR 2N3646	599737
20	Q 4	900-3646	TRANSISTOR 2N3646	599737
20	Q 5	900-3646	TRANSISTOR 2N3646	599737
20	Q 6	900-3646	TRANSISTOR 2N3646	599737
20	Q 7	900-3646	TRANSISTOR 2N3646	599737
20	Q 8	900-3646	TRANSISTOR 2N3646	599737
20	Q 9	900-3646	TRANSISTOR 2N3646	599737

ITEM NUMBER	REFERENCE DESIGNATION	TRACOR STOCK NUMBER	DESCRIPTION	STOCK NUMBER USED ON
20	Q 10	900-3646	TRANSISTOR 2N3646	599737
20	Q 11	900-3646	TRANSISTOR 2N3646	599737
20	Q 12	900-3646	TRANSISTOR 2N3646	599737
20	Q 13	900-3646	TRANSISTOR 2N3646	599737
20	Q 14	900-3646	TRANSISTOR 2N3646	599737
20	Q 15	900-3646	TRANSISTOR 2N3646	599737
20	Q 16	900-3646	TRANSISTOR 2N3646	599737
20	Q 17	900-3646	TRANSISTOR 2N3646	599737
20	Q 18	900-3646	TRANSISTOR 2N3646	599737
20	Q 19	900-3646	TRANSISTOR 2N3646	599737
20	Q 20	900-3646	TRANSISTOR 2N3646	599737
20	Q 21	900-3646	TRANSISTOR 2N3646	599737
20	Q 22	900-3646	TRANSISTOR 2N3646	599737
20	Q 23	900-3646	TRANSISTOR 2N3646	599737
20	Q 24	900-3646	TRANSISTOR 2N3646	599737
20	Q 25	900-3646	TRANSISTOR 2N3646	599737
20	Q 26	900-3646	TRANSISTOR 2N3646	599737
20	Q 27	900-3646	TRANSISTOR 2N3646	599737
20	Q 28	900-3646	TRANSISTOR 2N3646	599737
20	Q 29	900-3646	TRANSISTOR 2N3646	599737
20	Q 30	900-3646	TRANSISTOR 2N3646	599737
20	Q 31	900-3646	TRANSISTOR 2N3646	599737
11	R 1	200-0103	RES 10K	599737
11	R 2	200-0103	RES 10K	599737
12	R 3	200-0152	RES 1X5K	599737
17	R 4	200-0471	RES 470 OHMS	599737
11	R 5	200-0103	RES 10K	599737
11	R 6	200-0103	RES 10K	599737
11	R 7	200-0103	RES 10K	599737
10	R 8	200-0102	RES 1K	599737
11	R 9	200-0103	RES 10K	599737
11	R 10	200-0103	RES 10K	599737
11	R 11	200-0103	RES 10K	599737
10	R 12	200-0102	RES 1K	599737
18	R 13	200-0822	RES 8X2K	599737
11	R 14	200-0103	RES 10K	599737
11	R 15	200-0103	RES 10K	599737
18	R 16	200-0822	RES 8X2K	599737
10	R 17	200-0102	RES 1K	599737
11	R 18	200-0103	RES 10K	599737
11	R 19	200-0103	RES 10K	599737
10	R 20	200-0102	RES 1K	599737
11	R 21	200-0103	RES 10K	599737
11	R 22	200-0103	RES 10K	599737
11	R 23	200-0103	RES 10K	599737
11	R 24	200-0103	RES 10K	599737
11	R 25	200-0103	RES 10K	599737
10	R 26	200-0102	RES 1K	599737
18	R 27	200-0822	RES 8X2K	599737
11	R 28	200-0103	RES 10K	599737
11	R 29	200-0103	RES 10K	599737
14	R 30	200-0222	RES 2X2K	599737
13	R 31	200-0221	RES 220 OHMS	599737
18	R 32	200-0822	RES 8X2K	599737
10	R 33	200-0102	RES 1K	599737
11	R 34	200-0103	RES 10K	599737
11	R 35	200-0103	RES 10K	599737
11	R 36	200-0103	RES 10K	599737
11	R 37	200-0103	RES 10K	599737
11	R 38	200-0103	RES 10K	599737
11	R 39	200-0103	RES 10K	599737
11	R 40	200-0103	RES 10K	599737
10	R 41	200-0102	RES 1K	599737
18	R 42	200-0822	RES 8X2K	599737
11	R 43	200-0103	RES 10K	599737
11	R 44	200-0103	RES 10K	599737
18	R 45	200-0822	RES 8X2K	599737
10	R 46	200-0102	RES 1K	599737
11	R 47	200-0103	RES 10K	599737
11	R 48	200-0103	RES 10K	599737
11	R 49	200-0103	RES 10K	599737
11	R 50	200-0103	RES 10K	599737
11	R 51	200-0103	RES 10K	599737
11	R 52	200-0103	RES 10K	599737
11	R 53	200-0103	RES 10K	599737
10	R 54	200-0102	RES 1K	599737
18	R 55	200-0822	RES 8X2K	599737

ITEM NUMBER	REFERENCE DESIGNATION	T R A C O R STOCK NUMBER	DESCRIPTION	STOCK NUMBER USED ON
11	R 56	200-0103	RES 10K	599737
11	R 57	200-0103	RES 10K	599737
18	R 58	200-0822	RES 8X2K	599737
10	R 59	200-0102	RES 1K	599737
11	R 60	200-0103	RES 10K	599737
11	R 61	200-0103	RES 10K	599737
11	R 62	200-0103	RES 10K	599737
11	R 63	200-0103	RES 10K	599737
11	R 64	200-0103	RES 10K	599737
11	R 65	200-0103	RES 10K	599737
10	R 66	200-0102	RES 1K	599737
11	R 67	200-0103	RES 10K	599737
11	R 68	200-0103	RES 10K	599737
11	R 69	200-0103	RES 10K	599737
11	R 70	200-0103	RES 10K	599737
11	R 71	200-0103	RES 10K	599737
10	R 72	200-0102	RES 1K	599737
11	R 73	200-0103	RES 10K	599737
11	R 74	200-0103	RES 10K	599737
15	R 75	200-0330	RES 33 OHMS	599737
10	R 76	200-0102	RES 1K	599737
11	R 77	200-0103	RES 10K	599737
10	R 78	200-0102	RES 1K	599737
18	R 79	200-0822	RES 8X2K	599737
11	R 80	200-0103	RES 10K	599737
11	R 81	200-0103	RES 10K	599737
18	R 82	200-0822	RES 8X2K	599737
10	R 83	200-0102	RES 1K	599737
11	R 84	200-0103	RES 10K	599737
11	R 85	200-0103	RES 10K	599737
13	R 86	200-0221	RES 220 OHMS	599737
14	R 87	200-0222	RES 2X2K	599737
17	R 88	200-0471	RES 470 OHMS	599737
12	R 89	200-0152	RES 1X5K	599737
11	R 90	200-0103	RES 10K	599737
11	R 91	200-0103	RES 10K	599737
11	R 92	200-0103	RES 10K	599737
10	R 93	200-0102	RES 1K	599737
11	R 94	200-0103	RES 10K	599737
11	R 95	200-0103	RES 10K	599737
8	R 97	200-0100	RES 10 OHM	599737
8	R 98	200-0100	RES 10 OHM	599737
10	R 99	200-0102	RES 1K	599737
11	R 100	200-0103	RES 10K	599737
11	R 101	200-0103	RES 10K	599737
11	R 102	200-0103	RES 10K	599737
9	R 103	200-0101	RES 100 OHMS	599737
16	R 104	200-0331	RES 330 OHMS	599737
11	R 105	200-0103	RES 10K	599737
11	R 106	200-0103	RES 10K	599737
11	R 107	200-0103	RES 10K	599737
10	R 108	200-0102	RES 1K	599737
10	R 109	200-0102	RES 1K	599737
10	R 110	200-0102	RES 1K	599737
11	R 111	200-0103	RES 10K	599737
11	R 112	200-0103	RES 10K	599737
11	R 113	200-0103	RES 10K	599737
11	R 114	200-0103	RES 10K	599737
11	R 115	200-0103	RES 10K	599737
19	CR 1	800-0914	DIODE IN914	599737
19	CR 2	800-0914	DIODE IN914	599737
19	CR 3	800-0914	DIODE IN914	599737
19	CR 4	800-0914	DIODE IN914	599737
19	CR 5	800-0914	DIODE IN914	599737
19	CR 6	800-0914	DIODE IN914	599737
19	CR 7	800-0914	DIODE IN914	599737
19	CR 8	800-0914	DIODE IN914	599737
19	CR 9	800-0914	DIODE IN914	599737
19	CR 10	800-0914	DIODE IN914	599737
19	CR 11	800-0914	DIODE IN914	599737
19	CR 12	800-0914	DIODE IN914	599737
19	CR 13	800-0914	DIODE IN914	599737
19	CR 14	800-0914	DIODE IN914	599737
19	CR 15	800-0914	DIODE IN914	599737
19	CR 16	800-0914	DIODE IN914	599737

ITEM NUMBER	REFERENCE DESIGNATION	TRACOR STOCK NUMBER	DESCRIPTION	STOCK NUMBER USED ON
			BOARD PC ASSY	599738
1		599781	BOARD PC	599738
2		3326-0046	RIVETS	599738
7		3657-0001	INSULATOR TRANSISTOR	599738
8		8819-0022	BUS WIRE NO 22 AWG	599738
9		3426-0017	INSUL TUBING	599738
23	C 1	3924-0470	CAP 47PF	599738
23	C 2	3924-0470	CAP 47PF	599738
23	C 3	3924-0470	CAP 47PF	599738
23	C 4	3924-0470	CAP 47PF	599738
23	C 5	3924-0470	CAP 47PF	599738
23	C 6	3924-0470	CAP 47PF	599738
23	C 7	3924-0470	CAP 47PF	599738
23	C 8	3924-0470	CAP 47PF	599738
23	C 10	3924-0470	CAP 47PF	599738
23	C 11	3924-0470	CAP 47PF	599738
23	C 12	3924-0470	CAP 47PF	599738
23	C 13	3924-0470	CAP 47PF	599738
23	C 14	3924-0470	CAP 47PF	599738
23	C 15	3924-0470	CAP 47PF	599738
23	C 16	3924-0470	CAP 47PF	599738
23	C 17	3924-0470	CAP 47PF	599738
23	C 18	3924-0470	CAP 47PF	599738
23	C 19	3924-0470	CAP 47PF	599738
23	C 20	3924-0470	CAP 47PF	599738
21	C 21	3319-0221	CAP 220PF	599738
21	C 22	3319-0221	CAP 220PF	599738
22	C 23	3319-0561	CAP 560PF	599738
25	C 24	21485-9101	CAP 1MFD 35V	599738
25	C 25	21485-9101	CAP 1MFD 35V	599738
24	L 1	3925-0004	INDUCTOR BEAD	599738
24	L 2	3925-0004	INDUCTOR BEAD	599738
20	P 1	3318-0028	CONN PCB	599738
19	Q 1	900-3646	TRANSISTOR 2N3646	599738
19	Q 2	900-3646	TRANSISTOR 2N3646	599738
19	Q 3	900-3646	TRANSISTOR 2N3646	599738
19	Q 4	900-3646	TRANSISTOR 2N3646	599738
19	Q 5	900-3646	TRANSISTOR 2N3646	599738
19	Q 6	900-3646	TRANSISTOR 2N3646	599738
19	Q 7	900-3646	TRANSISTOR 2N3646	599738
19	Q 8	900-3646	TRANSISTOR 2N3646	599738
19	Q 9	900-3646	TRANSISTOR 2N3646	599738
19	Q 10	900-3646	TRANSISTOR 2N3646	599738
19	Q 11	900-3646	TRANSISTOR 2N3646	599738
19	Q 12	900-3646	TRANSISTOR 2N3646	599738
19	Q 13	900-3646	TRANSISTOR 2N3646	599738
19	Q 14	900-3646	TRANSISTOR 2N3646	599738
19	Q 15	900-3646	TRANSISTOR 2N3646	599738
19	Q 16	900-3646	TRANSISTOR 2N3646	599738
19	Q 17	900-3646	TRANSISTOR 2N3646	599738
19	Q 18	900-3646	TRANSISTOR 2N3646	599738
19	Q 19	900-3646	TRANSISTOR 2N3646	599738
19	Q 20	900-3646	TRANSISTOR 2N3646	599738
19	Q 21	900-3646	TRANSISTOR 2N3646	599738
19	Q 22	900-3646	TRANSISTOR 2N3646	599738
19	Q 24	900-3646	TRANSISTOR 2N3646	599738
19	Q 25	900-3646	TRANSISTOR 2N3646	599738
19	Q 26	900-3646	TRANSISTOR 2N3646	599738
19	Q 27	900-3646	TRANSISTOR 2N3646	599738
19	Q 28	900-3646	TRANSISTOR 2N3646	599738
19	Q 29	900-3646	TRANSISTOR 2N3646	599738
19	Q 30	900-3646	TRANSISTOR 2N3646	599738
19	Q 31	900-3646	TRANSISTOR 2N3646	599738
19	Q 32	900-3646	TRANSISTOR 2N3646	599738
19	Q 33	900-3646	TRANSISTOR 2N3646	599738
19	Q 34	900-3646	TRANSISTOR 2N3646	599738
19	Q 35	900-3646	TRANSISTOR 2N3646	599738
19	Q 36	900-3646	TRANSISTOR 2N3646	599738
19	Q 37	900-3646	TRANSISTOR 2N3646	599738
11	R 1	200-0102	RES 1K	599738
11	R 2	200-0102	RES 1K	599738
11	R 3	200-0102	RES 1K	599738
11	R 4	200-0102	RES 1K	599738
11	R 5	200-0102	RES 1K	599738
11	R 6	200-0102	RES 1K	599738
11	R 7	200-0102	RES 1K	599738

ITEM NUMBER	REFERENCE DESIGNATION	T R A C O R STOCK NUMBER	DESCRIPTION	STOCK NUMBER USED ON
11	R 8	200-0102	RES 1K	599738
11	R 9	200-0102	RES 1K	599738
11	R 10	200-0102	RES 1K	599738
11	R 11	200-0102	RES 1K	599738
11	R 12	200-0102	RES 1K	599738
11	R 13	200-0102	RES 1K	599738
11	R 14	200-0102	RES 1K	599738
11	R 15	200-0102	RES 1K	599738
11	R 16	200-0102	RES 1K	599738
11	R 17	200-0102	RES 1K	599738
11	R 18	200-0102	RES 1K	599738
11	R 19	200-0102	RES 1K	599738
11	R 20	200-0102	RES 1K	599738
17	R 21	200-0822	RES 8X2K	599738
17	R 22	200-0822	RES 8X2K	599738
17	R 23	200-0822	RES 8X2K	599738
17	R 24	200-0822	RES 8X2K	599738
17	R 25	200-0822	RES 8X2K	599738
17	R 26	200-0822	RES 8X2K	599738
17	R 27	200-0822	RES 8X2K	599738
17	R 28	200-0822	RES 8X2K	599738
17	R 29	200-0822	RES 8X2K	599738
17	R 30	200-0822	RES 8X2K	599738
17	R 31	200-0822	RES 8X2K	599738
17	R 32	200-0822	RES 8X2K	599738
17	R 33	200-0822	RES 8X2K	599738
17	R 34	200-0822	RES 8X2K	599738
17	R 35	200-0822	RES 8X2K	599738
17	R 36	200-0822	RES 8X2K	599738
17	R 37	200-0822	RES 8X2K	599738
17	R 38	200-0822	RES 8X2K	599738
17	R 39	200-0822	RES 8X2K	599738
17	R 40	200-0822	RES 8X2K	599738
12	R 41	200-0103	RES 10K	599738
12	R 42	200-0103	RES 10K	599738
12	R 43	200-0103	RES 10K	599738
12	R 44	200-0103	RES 10K	599738
12	R 45	200-0103	RES 10K	599738
12	R 46	200-0103	RES 10K	599738
12	R 47	200-0103	RES 10K	599738
12	R 48	200-0103	RES 10K	599738
12	R 50	200-0103	RES 10K	599738
12	R 51	200-0103	RES 10K	599738
12	R 52	200-0103	RES 10K	599738
12	R 53	200-0103	RES 10K	599738
12	R 54	200-0103	RES 10K	599738
12	R 55	200-0103	RES 10K	599738
12	R 56	200-0103	RES 10K	599738
12	R 57	200-0103	RES 10K	599738
12	R 58	200-0103	RES 10K	599738
12	R 59	200-0103	RES 10K	599738
12	R 60	200-0103	RES 10K	599738
12	R 61	200-0103	RES 10K	599738
12	R 62	200-0103	RES 10K	599738
12	R 63	200-0103	RES 10K	599738
12	R 64	200-0103	RES 10K	599738
12	R 65	200-0103	RES 10K	599738
12	R 66	200-0103	RES 10K	599738
12	R 67	200-0103	RES 10K	599738
12	R 68	200-0103	RES 10K	599738
12	R 69	200-0103	RES 10K	599738
12	R 70	200-0103	RES 10K	599738
12	R 71	200-0103	RES 10K	599738
12	R 72	200-0103	RES 10K	599738
12	R 73	200-0103	RES 10K	599738
12	R 74	200-0103	RES 10K	599738
11	R 75	200-0102	RES 1K	599738
12	R 76	200-0103	RES 10K	599738
12	R 77	200-0103	RES 10K	599738
12	R 78	200-0103	RES 10K	599738
12	R 79	200-0103	RES 10K	599738
12	R 80	200-0103	RES 10K	599738
11	R 81	200-0102	RES 1K	599738
12	R 82	200-0103	RES 10K	599738
12	R 83	200-0103	RES 10K	599738
12	R 84	200-0103	RES 10K	599738
12	R 85	200-0103	RES 10K	599738

ITEM NUMBER	REFERENCE DESIGNATION	T R A C O R STOCK NUMBER	DESCRIPTION	STOCK NUMBER USED ON
12	R 86	200-0103	RES 10K	599738
12	R 87	200-0103	RES 10K	599738
12	R 88	200-0103	RES 10K	599738
12	R 89	200-0103	RES 10K	599738
12	R 90	200-0103	RES 10K	599738
12	R 91	200-0103	RES 10K	599738
14	R 92	200-0221	RES 220 OHMS	599738
12	R 93	200-0103	RES 10K	599738
12	R 94	200-0103	RES 10K	599738
12	R 95	200-0103	RES 10K	599738
12	R 96	200-0103	RES 10K	599738
12	R 97	200-0103	RES 10K	599738
12	R 98	200-0103	RES 10K	599738
12	R 99	200-0103	RES 10K	599738
12	R 100	200-0103	RES 10K	599738
12	R 101	200-0103	RES 10K	599738
12	R 102	200-0103	RES 10K	599738
12	R 103	200-0103	RES 10K	599738
12	R 104	200-0103	RES 10K	599738
12	R 105	200-0103	RES 10K	599738
12	R 106	200-0103	RES 10K	599738
12	R 107	200-0103	RES 10K	599738
12	R 108	200-0103	RES 10K	599738
12	R 109	200-0103	RES 10K	599738
12	R 110	200-0103	RES 10K	599738
12	R 111	200-0103	RES 10K	599738
12	R 112	200-0103	RES 10K	599738
12	R 113	200-0103	RES 10K	599738
12	R 114	200-0103	RES 10K	599738
12	R 115	200-0103	RES 10K	599738
12	R 116	200-0103	RES 10K	599738
12	R 117	200-0103	RES 10K	599738
12	R 118	200-0103	RES 10K	599738
12	R 119	200-0103	RES 10K	599738
12	R 120	200-0103	RES 10K	599738
12	R 121	200-0103	RES 10K	599738
12	R 122	200-0103	RES 10K	599738
12	R 123	200-0103	RES 10K	599738
12	R 124	200-0103	RES 10K	599738
12	R 125	200-0103	RES 10K	599738
12	R 126	200-0103	RES 10K	599738
12	R 127	200-0103	RES 10K	599738
12	R 128	200-0103	RES 10K	599738
12	R 129	200-0103	RES 10K	599738
12	R 130	200-0103	RES 10K	599738
12	R 131	200-0103	RES 10K	599738
12	R 132	200-0103	RES 10K	599738
12	R 133	200-0103	RES 10K	599738
12	R 134	200-0103	RES 10K	599738
15	R 135	200-0222	RES 2X2K	599738
15	R 136	200-0222	RES 2X2K	599738
16	R 137	200-0471	RES 470 OHMS	599738
14	R 138	200-0221	RES 220 OHMS	599738
16	R 139	200-0471	RES 470 OHMS	599738
12	R 140	200-0103	RES 10K	599738
12	R 141	200-0103	RES 10K	599738
13	R 143	200-0152	RES 1X5K	599738
12	R 144	200-0103	RES 10K	599738
12	R 145	200-0103	RES 10K	599738
12	R 148	200-0103	RES 10K	599738
16	R 149	200-0471	RES 470 OHMS	599738
16	R 150	200-0471	RES 470 OHMS	599738
18	CR 1	800-0914	DIODE IN914	599738
18	CR 2	800-0914	DIODE IN914	599738
18	CR 3	800-0914	DIODE IN914	599738
18	CR 4	800-0914	DIODE IN914	599738
18	CR 5	800-0914	DIODE IN914	599738
18	CR 6	800-0914	DIODE IN914	599738
18	CR 7	800-0914	DIODE IN914	599738
18	CR 8	800-0914	DIODE IN914	599738
18	CR 10	800-0914	DIODE IN914	599738
18	CR 11	800-0914	DIODE IN914	599738
18	CR 12	800-0914	DIODE IN914	599738
18	CR 13	800-0914	DIODE IN914	599738
18	CR 14	800-0914	DIODE IN914	599738
18	CR 15	800-0914	DIODE IN914	599738
18	CR 16	800-0914	DIODE IN914	599738

ITEM NUMBER	REFERENCE DESIGNATION	TRACOR STOCK NUMBER	DESCRIPTION	STOCK NUMBER USED ON
18	CR 17	800-0914	DIODE IN914	599738
18	CR 18	800-0914	DIODE IN914	599738
18	CR 19	800-0914	DIODE IN914	599738
18	CR 20	800-0914	DIODE IN914	599738
18	CR 21	800-0914	DIODE IN914	599738
18	CR 22	800-0914	DIODE IN914	599738
18	CR 23	800-0914	DIODE IN914	599738
18	CR 24	800-0914	DIODE IN914	599738
18	CR 25	800-0914	DIODE IN914	599738
18	CR 26	800-0914	DIODE IN914	599738
18	CR 27	800-0914	DIODE IN914	599738
18	CR 28	800-0914	DIODE IN914	599738
18	CR 29	800-0914	DIODE IN914	599738
18	CR 30	800-0914	DIODE IN914	599738
			BOARD PC ASSY IF AMP	599746
1		599779	BOARD PC	599746
7		3326-0046	RIVET	599746
8		8819-0022	BUS WIRE NO 22 AWG	599746
9		3426-0017	TUBING INSUL	599746
10		3657-0001	TRANSIPAD	599746
11		3657-0011	TRANSIPAD	599746
67	C 1	3947-9153	CAP X015MFD 1X0 PC	599746
71	C 2	8918-0331	CAP 330MFD	599746
58	C 3	3319-0681	CAP 680PF	599746
61	C 4	3611-9103	CAP X01MFD	599746
58	C 5	3319-0681	CAP 680PF	599746
58	C 6	3319-0681	CAP 680PF	599746
70	C 7	8917-9471	CAP 4X7MFD	599746
58	C 8	3319-0681	CAP 680PF	599746
58	C 9	3319-0681	CAP 680PF	599746
58	C 10	3319-0681	CAP 680PF	599746
73	C 11	27513-0102	CAP 1000PF	599746
70	C 12	8917-9471	CAP 4X7MFD	599746
58	C 13	3319-0681	CAP 680PF	599746
73	C 14	27513-0102	CAP 1000PF	599746
56	C 15	3319-0221	CAP 220PF	599746
69	C 16	8917-0390	CAP 39MFD	599746
69	C 17	8917-0390	CAP 39MFD	599746
71	C 18	8918-0331	CAP 330MFD	599746
74	C 19	27513-0471	CAP 470PF	599746
65	C 20	3924-0470	CAP 47PF	599746
59	C 21	3324-9103	CAP X01MFD	599746
69	C 22	8917-0390	CAP 39MFD	599746
69	C 23	8917-0390	CAP 39MFD	599746
63	C 24	3656-5002	CAP X05MFD	599746
63	C 25	3656-5002	CAP X05MFD	599746
62	C 26	3656-1003	CAP 0X1MFD	599746
75	C 27	27513-0681	CAP 680PF	599746
63	C 28	3656-5002	CAP X05MFD	599746
63	C 29	3656-5002	CAP X05MFD	599746
62	C 30	3656-1003	CAP 0X1MFD	599746
75	C 31	27513-0681	CAP 680PF	599746
63	C 32	3656-5002	CAP X05MFD	599746
63	C 33	3656-5002	CAP X05MFD	599746
62	C 34	3656-1003	CAP 0X1MFD	599746
75	C 35	27513-0681	CAP 680PF	599746
63	C 36	3656-5002	CAP X05MFD	599746
63	C 37	3656-5002	CAP X05MFD	599746
62	C 38	3656-1003	CAP 0X1MFD	599746
75	C 39	27513-0681	CAP 680PF	599746
65	C 40	3924-0470	CAP 47PF	599746
72	C 41	21485-9101	CAP 1X0MFD	599746
72	C 42	21485-9101	CAP 1X0MFD	599746
60	C 43	3611-9102	CAP 0X1MFD	599746
55	C 44	3319-0151	CAP 150PF	599746
65	C 45	3924-0470	CAP 47PF	599746
68	C 46	8917-0121	CAP 120MFD	599746
65	C 47	3924-0470	CAP 47PF	599746
57	C 48	3319-0472	CAP X0047MFD	599746
71	C 49	8918-0331	CAP 330MFD	599746
72	C 50	21485-9101	CAP 1X0MFD	599746
71	C 51	8918-0331	CAP 330MFD	599746
72	C 52	21485-9101	CAP 1X0MFD	599746
72	C 53	21485-9101	CAP 1X0MFD	599746

ITEM NUMBER	REFERENCE DESIGNATION	T R A C O R STOCK NUMBER	DESCRIPTION	STOCK NUMBER USED ON
12	R 86	200-0103	RES 10K	599738
12	R 87	200-0103	RES 10K	599738
12	R 88	200-0103	RES 10K	599738
12	R 89	200-0103	RES 10K	599738
12	R 90	200-0103	RES 10K	599738
12	R 91	200-0103	RES 10K	599738
14	R 92	200-0221	RES 220 OHMS	599738
12	R 93	200-0103	RES 10K	599738
12	R 94	200-0103	RES 10K	599738
12	R 95	200-0103	RES 10K	599738
12	R 96	200-0103	RES 10K	599738
12	R 97	200-0103	RES 10K	599738
12	R 98	200-0103	RES 10K	599738
12	R 99	200-0103	RES 10K	599738
12	R 100	200-0103	RES 10K	599738
12	R 101	200-0103	RES 10K	599738
12	R 102	200-0103	RES 10K	599738
12	R 103	200-0103	RES 10K	599738
12	R 104	200-0103	RES 10K	599738
12	R 105	200-0103	RES 10K	599738
12	R 106	200-0103	RES 10K	599738
12	R 107	200-0103	RES 10K	599738
12	R 108	200-0103	RES 10K	599738
12	R 109	200-0103	RES 10K	599738
12	R 110	200-0103	RES 10K	599738
12	R 111	200-0103	RES 10K	599738
12	R 112	200-0103	RES 10K	599738
12	R 113	200-0103	RES 10K	599738
12	R 114	200-0103	RES 10K	599738
12	R 115	200-0103	RES 10K	599738
12	R 116	200-0103	RES 10K	599738
12	R 117	200-0103	RES 10K	599738
12	R 118	200-0103	RES 10K	599738
12	R 119	200-0103	RES 10K	599738
12	R 120	200-0103	RES 10K	599738
12	R 121	200-0103	RES 10K	599738
12	R 122	200-0103	RES 10K	599738
12	R 123	200-0103	RES 10K	599738
12	R 124	200-0103	RES 10K	599738
12	R 125	200-0103	RES 10K	599738
12	R 126	200-0103	RES 10K	599738
12	R 127	200-0103	RES 10K	599738
12	R 128	200-0103	RES 10K	599738
12	R 129	200-0103	RES 10K	599738
12	R 130	200-0103	RES 10K	599738
12	R 131	200-0103	RES 10K	599738
12	R 132	200-0103	RES 10K	599738
12	R 133	200-0103	RES 10K	599738
12	R 134	200-0103	RES 10K	599738
15	R 135	200-0222	RES 2X2K	599738
15	R 136	200-0222	RES 2X2K	599738
16	R 137	200-0471	RES 470 OHMS	599738
14	R 138	200-0221	RES 220 OHMS	599738
16	R 139	200-0471	RES 470 OHMS	599738
12	R 140	200-0103	RES 10K	599738
12	R 141	200-0103	RES 10K	599738
13	R 143	200-0152	RES 1X5K	599738
12	R 144	200-0103	RES 10K	599738
12	R 145	200-0103	RES 10K	599738
12	R 148	200-0103	RES 10K	599738
16	R 149	200-0471	RES 470 OHMS	599738
16	R 150	200-0471	RES 470 OHMS	599738
18	CR 1	800-0914	DIODE IN914	599738
18	CR 2	800-0914	DIODE IN914	599738
18	CR 3	800-0914	DIODE IN914	599738
18	CR 4	800-0914	DIODE IN914	599738
18	CR 5	800-0914	DIODE IN914	599738
18	CR 6	800-0914	DIODE IN914	599738
18	CR 7	800-0914	DIODE IN914	599738
18	CR 8	800-0914	DIODE IN914	599738
18	CR 10	800-0914	DIODE IN914	599738
18	CR 11	800-0914	DIODE IN914	599738
18	CR 12	800-0914	DIODE IN914	599738
18	CR 13	800-0914	DIODE IN914	599738
18	CR 14	800-0914	DIODE IN914	599738
18	CR 15	800-0914	DIODE IN914	599738
18	CR 16	800-0914	DIODE IN914	599738

ITEM NUMBER	REFERENCE DESIGNATION	TRACOR STOCK NUMBER	DESCRIPTION	STOCK NUMBER USED ON
18	CR 17	800-0914	DIODE IN914	599738
18	CR 18	800-0914	DIODE IN914	599738
18	CR 19	800-0914	DIODE IN914	599738
18	CR 20	800-0914	DIODE IN914	599738
18	CR 21	800-0914	DIODE IN914	599738
18	CR 22	800-0914	DIODE IN914	599738
18	CR 23	800-0914	DIODE IN914	599738
18	CR 24	800-0914	DIODE IN914	599738
18	CR 25	800-0914	DIODE IN914	599738
18	CR 26	800-0914	DIODE IN914	599738
18	CR 27	800-0914	DIODE IN914	599738
18	CR 28	800-0914	DIODE IN914	599738
18	CR 29	800-0914	DIODE IN914	599738
18	CR 30	800-0914	DIODE IN914	599738
			BOARD PC ASSY IF AMP	599746
1		599779	BOARD PC	599746
7		3326-0046	RIVET	599746
8		8819-0022	BUS WIRE NO 22 AWG	599746
9		3426-0017	TUBING INSUL	599746
10		3657-0001	TRANSIPAD	599746
11		3657-0011	TRANSIPAD	599746
67	C 1	3947-9153	CAP X015MFD 1X0 PC	599746
71	C 2	8918-0331	CAP 330MFD	599746
58	C 3	3319-0681	CAP 680PF	599746
61	C 4	3611-9103	CAP X01MFD	599746
58	C 5	3319-0681	CAP 680PF	599746
58	C 6	3319-0681	CAP 680PF	599746
70	C 7	8917-9471	CAP 4X7MFD	599746
58	C 8	3319-0681	CAP 680PF	599746
58	C 9	3319-0681	CAP 680PF	599746
58	C 10	3319-0681	CAP 680PF	599746
73	C 11	27513-0102	CAP 1000PF	599746
70	C 12	8917-9471	CAP 4X7MFD	599746
58	C 13	3319-0681	CAP 680PF	599746
73	C 14	27513-0102	CAP 1000PF	599746
56	C 15	3319-0221	CAP 220PF	599746
69	C 16	8917-0390	CAP 39MFD	599746
69	C 17	8917-0390	CAP 39MFD	599746
71	C 18	8918-0331	CAP 330MFD	599746
74	C 19	27513-0471	CAP 470PF	599746
65	C 20	3924-0470	CAP 47PF	599746
59	C 21	3324-9103	CAP X01MFD	599746
69	C 22	8917-0390	CAP 39MFD	599746
69	C 23	8917-0390	CAP 39MFD	599746
63	C 24	3656-5002	CAP X05MFD	599746
63	C 25	3656-5002	CAP X05MFD	599746
62	C 26	3656-1003	CAP 0X1MFD	599746
75	C 27	27513-0681	CAP 680PF	599746
63	C 28	3656-5002	CAP X05MFD	599746
63	C 29	3656-5002	CAP X05MFD	599746
62	C 30	3656-1003	CAP 0X1MFD	599746
75	C 31	27513-0681	CAP 680PF	599746
63	C 32	3656-5002	CAP X05MFD	599746
63	C 33	3656-5002	CAP X05MFD	599746
62	C 34	3656-1003	CAP 0X1MFD	599746
75	C 35	27513-0681	CAP 680PF	599746
63	C 36	3656-5002	CAP X05MFD	599746
63	C 37	3656-5002	CAP X05MFD	599746
62	C 38	3656-1003	CAP 0X1MFD	599746
75	C 39	27513-0681	CAP 680PF	599746
65	C 40	3924-0470	CAP 47PF	599746
72	C 41	21485-9101	CAP 1X0MFD	599746
72	C 42	21485-9101	CAP 1X0MFD	599746
60	C 43	3611-9102	CAP 0X1MFD	599746
55	C 44	3319-0151	CAP 150PF	599746
65	C 45	3924-0470	CAP 47PF	599746
68	C 46	8917-0121	CAP 120MFD	599746
65	C 47	3924-0470	CAP 47PF	599746
57	C 48	3319-0472	CAP X0047MFD	599746
71	C 49	8918-0331	CAP 330MFD	599746
72	C 50	21485-9101	CAP 1X0MFD	599746
71	C 51	8918-0331	CAP 330MFD	599746
72	C 52	21485-9101	CAP 1X0MFD	599746
72	C 53	21485-9101	CAP 1X0MFD	599746

ITEM NUMBER	REFERENCE DESIGNATION	TRACOR STOCK NUMBER	DESCRIPTION	STOCK NUMBER USED ON
69	C 54	8917-0390	CAP 39MFD	599746
66	L 1	3925-0004	INDUCTOR BEAD	599746
66	L 2	3925-0004	INDUCTOR BEAD	599746
66	L 3	3925-0004	INDUCTOR BEAD	599746
66	L 4	3925-0004	INDUCTOR BEAD	599746
66	L 5	3925-0004	INDUCTOR BEAD	599746
54	P 1	3318-0028	CONN PCB	599746
53	Q 1	900-3708	TRANSISTOR 2N3708	599746
53	Q 2	900-3708	TRANSISTOR 2N3708	599746
51	Q 3	900-3702	TRANSISTOR 2N3702	599746
52	Q 5	900-3705	TRANSISTOR 2N3705	599746
52	Q 6	900-3705	TRANSISTOR 2N3705	599746
51	Q 7	900-3702	TRANSISTOR 2N3702	599746
50	Q 8	900-3646	TRANSISTOR 2N3646	599746
53	Q 9	900-3708	TRANSISTOR 2N3708	599746
53	Q 10	900-3708	TRANSISTOR 2N3708	599746
51	Q 11	900-3702	TRANSISTOR 2N3702	599746
50	Q 12	900-3646	TRANSISTOR 2N3646	599746
53	Q 13	900-3708	TRANSISTOR 2N3708	599746
53	Q 14	900-3708	TRANSISTOR 2N3708	599746
51	Q 15	900-3702	TRANSISTOR 2N3702	599746
50	Q 16	900-3646	TRANSISTOR 2N3646	599746
53	Q 17	900-3708	TRANSISTOR 2N3708	599746
53	Q 18	900-3708	TRANSISTOR 2N3708	599746
51	Q 19	900-3702	TRANSISTOR 2N3702	599746
50	Q 20	900-3646	TRANSISTOR 2N3646	599746
53	Q 21	900-3708	TRANSISTOR 2N3708	599746
53	Q 22	900-3708	TRANSISTOR 2N3708	599746
51	Q 23	900-3702	TRANSISTOR 2N3702	599746
50	Q 24	900-3646	TRANSISTOR 2N3646	599746
53	Q 25	900-3708	TRANSISTOR 2N3708	599746
53	Q 26	900-3708	TRANSISTOR 2N3708	599746
51	Q 27	900-3702	TRANSISTOR 2N3702	599746
52	Q 28	900-3705	TRANSISTOR 2N3705	599746
53	Q 29	900-3708	TRANSISTOR 2N3708	599746
53	Q 30	900-3708	TRANSISTOR 2N3708	599746
51	Q 31	900-3702	TRANSISTOR 2N3702	599746
51	Q 32	900-3702	TRANSISTOR 2N3702	599746
50	Q 33	900-3646	TRANSISTOR 2N3646	599746
53	Q 34	900-3708	TRANSISTOR 2N3708	599746
50	Q 35	900-3646	TRANSISTOR 2N3646	599746
50	Q 36	900-3646	TRANSISTOR 2N3646	599746
51	Q 37	900-3702	TRANSISTOR 2N3702	599746
51	Q 38	900-3702	TRANSISTOR 2N3702	599746
64	R 1	3838-0102	RES 1K VAR	599746
64	R 2	3838-0102	RES 1K VAR	599746
47	R 3	739-0004	RES 10X0K	599746
34	R 4	211-1783	RES 178K	599746
12	R 5	200-0100	RES 10 OHMS	599746
25	R 6	200-0470	RES 47 OHMS	599746
13	R 7	200-0101	RES 100 OHMS	599746
21	R 8	200-0273	RES 27K	599746
32	R 9	211-1102	RES 11X0K	599746
41	R 10	211-4642	RES 46X4K	599746
14	R 11	200-0102	RES 1K	599746
39	R 12	211-3161	RES 3X16K	599746
39	R 13	211-3161	RES 3X16K	599746
36	R 14	211-2371	RES 2X37K	599746
25	R 16	200-0470	RES 47 OHMS	599746
13	R 17	200-0101	RES 100 OHMS	599746
21	R 18	200-0273	RES 27K	599746
33	R 19	211-1622	RES 16X2K	599746
46	R 20	211-8251	RES 8X25K	599746
46	R 21	211-8251	RES 8X25K	599746
25	R 22	200-0470	RES 47 OHMS	599746
33	R 23	211-1622	RES 16X2K	599746
13	R 24	200-0101	RES 100 OHMS	599746
21	R 25	200-0273	RES 27K	599746
45	R 26	211-8250	RES 825 OHMS	599746
27	R 27	200-0472	RES 4X7K	599746
45	R 28	211-8250	RES 825 OHMS	599746
27	R 29	200-0472	RES 4X7K	599746
46	R 30	211-8251	RES 8X25K	599746
46	R 31	211-8251	RES 8X25K	599746
13	R 32	200-0101	RES 100 OHMS	599746
21	R 33	200-0273	RES 27K	599746
33	R 34	211-1622	RES 16X2K	599746

ITEM NUMBER	REFERENCE DESIGNATION	T R A C O R STOCK NUMBER	DESCRIPTION	STOCK NUMBER USED ON
25	R 35	200-0470	RES 47 OHMS	599746
46	R 36	211-8251	RES 8X25K	599746
46	R 37	211-8251	RES 8X25K	599746
25	R 38	200-0470	RES 47 OHMS	599746
33	R 39	211-1622	RES 16X2K	599746
13	R 40	200-0101	RES 100 OHMS	599746
21	R 41	200-0273	RES 27K	599746
42	R 42	211-5111	RES 5X11K	599746
42	R 43	211-5111	RES 5X11K	599746
25	R 44	200-0470	RES 47 OHMS	599746
13	R 45	200-0101	RES 100 OHMS	599746
21	R 46	200-0273	RES 27K	599746
33	R 47	211-1622	RES 16X2K	599746
45	R 48	211-8250	RES 825 OHMS	599746
27	R 49	200-0472	RES 4X7K	599746
45	R 50	211-8250	RES 825 OHMS	599746
43	R 51	211-5112	RES 51X1K	599746
45	R 52	211-8250	RES 825 OHMS	599746
42	R 53	211-5111	RES 5X11K	599746
42	R 54	211-5111	RES 5X11K	599746
25	R 55	200-0470	RES 47 OHMS	599746
13	R 56	200-0101	RES 100 OHMS	599746
21	R 57	200-0273	RES 27K	599746
24	R 58	200-0390	RES 39 OHMS	599746
43	R 59	211-5112	RES 51X1K	599746
22	R 60	200-0331	RES 330 OHMS	599746
45	R 61	211-8250	RES 825 OHMS	599746
33	R 62	211-1622	RES 16X2K	599746
13	R 63	200-0101	RES 100 OHMS	599746
14	R 64	200-0102	RES 1K	599746
15	R 65	200-0103	RES 10K	599746
19	R 66	200-0222	RES 2X2K	599746
19	R 67	200-0222	RES 2X2K	599746
13	R 68	200-0101	RES 100 OHMS	599746
16	R 69	200-0221	RES 220 OHMS	599746
28	R 70	200-0473	RES 47K	599746
13	R 71	200-0101	RES 100 OHMS	599746
19	R 72	200-0222	RES 2X2K	599746
20	R 73	200-0272	RES 2X7K	599746
26	R 74	200-0471	RES 470 OHMS	599746
13	R 75	200-0101	RES 100 OHMS	599746
14	R 76	200-0102	RES 1K	599746
31	R 77	211-1002	RES 10X0K	599746
40	R 78	211-3481	RES 3X48K	599746
14	R 79	200-0102	RES 1K	599746
44	R 80	211-7500	RES 750 OHMS	599746
28	R 81	200-0473	RES 47K	599746
17	R 82	200-0183	RES 18K	599746
27	R 83	200-0472	RES 4X7K	599746
27	R 85	200-0472	RES 4X7K	599746
48	R 87	741-0001	RES 1X58K	599746
49	R 88	741-0002	RES 3X16K	599746
49	R 89	741-0002	RES 3X16K	599746
35	R 90	211-2153	RES 215K	599746
48	R 92	741-0001	RES 1X58K	599746
49	R 93	741-0002	RES 3X16K	599746
49	R 94	741-0002	RES 3X16K	599746
35	R 95	211-2153	RES 215K	599746
48	R 97	741-0001	RES 1X58K	599746
49	R 98	741-0002	RES 3X16K	599746
49	R 99	741-0002	RES 3X16K	599746
35	R 100	211-2153	RES 215K	599746
48	R 102	741-0001	RES 1X58K	599746
49	R 103	741-0002	RES 3X16K	599746
49	R 104	741-0002	RES 3X16K	599746
35	R 105	211-2153	RES 215K	599746
14	R 106	200-0102	RES 1K	599746
12	R 107	200-0100	RES 10 OHMS	599746
30	R 108	200-0680	RES 68 OHMS	599746
29	R 109	200-0560	RES 56 OHMS	599746
12	R 110	200-0100	RES 10 OHMS	599746
16	R 112	200-0121	RES 120 OHMS	599746
14	R 113	200-0102	RES 1K	599746
12	R 114	200-0100	RES 10 OHMS	599746
38	R 115	211-2873	RES 287K	599746
46	R 116	211-8251	RES 8X25K	599746
37	R 117	211-2612	RES 26X1K	599746

ITEM NUMBER	REFERENCE DESIGNATION	TRACOR STOCK NUMBER	DESCRIPTION	STOCK NUMBER USED ON
26	R 118	200-0471	RES 470 OHMS	599746
			BOARD PC ASSY SEQ/DUA	599747
1		599816	BOARD PC	599747
2		3326-0046	RIVETS	599747
7		3388-0092	CABLE COAX	599747
8		8819-0022	BUS WIRE NO 22 AWG	599747
9		3426-0017	TUBING INSUL	599747
10		3657-0011	TRANSISTOR PAD	599747
11		3657-0001	TRANSISTOR PAD	599747
56	C 1	8917-0121	CAP 120MFD 10V	599747
50	C 2	3611-9102	CAP 0X1MFD	599747
49	C 4	3319-0681	CAP 680PF	599747
51	C 5	3655-5001	CAP X005MFD 1X0 PC	599747
50	C 6	3611-9102	CAP 0X1MFD	599747
49	C 7	3319-0681	CAP 680PF	599747
51	C 8	3655-5001	CAP X005MFD 1X0 PC	599747
53	C 9	3924-0470	CAP 47PF	599747
53	C 10	3924-0470	CAP 47PF	599747
53	C 11	3924-0470	CAP 47PF	599747
53	C 12	3924-0470	CAP 47PF	599747
53	C 13	3924-0470	CAP 47PF	599747
53	C 14	3924-0470	CAP 47PF	599747
53	C 15	3924-0470	CAP 47PF	599747
53	C 16	3924-0470	CAP 47PF	599747
59	C 17	21485-9101	CAP 1MFD 35V	599747
59	C 18	21485-9101	CAP 1MFD 35V	599747
47	C 19	3319-0151	CAP 150PF	599747
53	C 20	3924-0470	CAP 47PF	599747
53	C 21	3924-0470	CAP 47PF	599747
53	C 22	3924-0470	CAP 47PF	599747
53	C 23	3924-0470	CAP 47PF	599747
53	C 24	3924-0470	CAP 47PF	599747
53	C 25	3924-0470	CAP 47PF	599747
56	C 26	8917-0121	CAP 120MFD 10V	599747
46	C 27	3319-0100	CAP 10PF	599747
46	C 28	3319-0100	CAP 10PF	599747
48	C 29	3319-0331	CAP 330PF	599747
59	C 30	21485-9101	CAP 1MFD 35V	599747
58	C 31	8918-0331	CAP 330MFD 6V	599747
46	C 32	3319-0100	CAP 10PF	599747
46	C 33	3319-0100	CAP 10PF	599747
55	C 34	8914-0150	CAP 15MFD 20V	599747
55	C 35	8914-0150	CAP 15MFD 20V	599747
48	C 36	3319-0331	CAP 330PF	599747
57	C 37	8917-9471	CAP 4X7MFD 10V	599747
59	C 38	21485-9101	CAP 1MFD 35V	599747
59	C 39	21485-9101	CAP 1MFD 35V	599747
57	C 40	8917-9471	CAP 4X7MFD 10V	599747
60	C 42	27513-0561	CAP 560PF	599747
59	C 43	21485-9101	CAP 1MFD 35V	599747
54	L 1	3925-0004	INDUCTOR BEAD	599747
54	L 2	3925-0004	INDUCTOR BEAD	599747
54	L 3	3925-0004	INDUCTOR BEAD	599747
54	L 4	3925-0004	INDUCTOR BEAD	599747
54	L 5	3925-0004	INDUCTOR BEAD	599747
54	L 6	3925-0004	INDUCTOR BEAD	599747
54	L 7	3925-0004	INDUCTOR BEAD	599747
54	L 8	3925-0004	INDUCTOR BEAD	599747
54	L 9	3925-0004	INDUCTOR BEAD	599747
54	L 10	3925-0004	INDUCTOR BEAD	599747
54	L 11	3925-0004	INDUCTOR BEAD	599747
54	L 12	3925-0004	INDUCTOR BEAD	599747
54	L 13	3925-0004	INDUCTOR BEAD	599747
54	L 14	3925-0004	INDUCTOR BEAD	599747
54	L 15	3925-0004	INDUCTOR BEAD	599747
54	L 16	3925-0004	INDUCTOR BEAD	599747
54	L 17	3925-0004	INDUCTOR BEAD	599747
54	L 18	3925-0004	INDUCTOR BEAD	599747
54	L 19	3925-0004	INDUCTOR BEAD	599747
54	L 20	3925-0004	INDUCTOR BEAD	599747
54	L 21	3925-0004	INDUCTOR BEAD	599747
45	P 1	3318-0028	CONN PCB	599747
41	Q 1	900-3646	TRANSISTOR 2N3646	599747
41	Q 2	900-3646	TRANSISTOR 2N3646	599747

ITEM NUMBER	REFERENCE DESIGNATION	TRACOR STOCK NUMBER	DESCRIPTION	STOCK NUMBER USED ON
40	Q 3	900-0708	TRANSISTOR 2N708	599747
40	Q 4	900-0708	TRANSISTOR 2N708	599747
40	Q 5	900-0708	TRANSISTOR 2N708	599747
40	Q 6	900-0708	TRANSISTOR 2N708	599747
43	Q 7	900-3705	TRANSISTOR 2N3705	599747
43	Q 8	900-3705	TRANSISTOR 2N3705	599747
42	Q 9	900-3702	TRANSISTOR 2N3702	599747
43	Q 10	900-3705	TRANSISTOR 2N3705	599747
44	Q 11	900-3708	TRANSISTOR 2N3708	599747
44	Q 12	900-3708	TRANSISTOR 2N3708	599747
44	Q 13	900-3708	TRANSISTOR 2N3708	599747
44	Q 14	900-3708	TRANSISTOR 2N3708	599747
41	Q 15	900-3646	TRANSISTOR 2N3646	599747
41	Q 16	900-3646	TRANSISTOR 2N3646	599747
40	Q 17	900-0708	TRANSISTOR 2N708	599747
40	Q 18	900-0708	TRANSISTOR 2N708	599747
40	Q 19	900-0708	TRANSISTOR 2N708	599747
40	Q 20	900-0708	TRANSISTOR 2N708	599747
43	Q 21	900-3705	TRANSISTOR 2N3705	599747
43	Q 22	900-3705	TRANSISTOR 2N3705	599747
42	Q 23	900-3702	TRANSISTOR 2N3702	599747
43	Q 24	900-3705	TRANSISTOR 2N3705	599747
41	Q 25	900-3646	TRANSISTOR 2N3646	599747
41	Q 26	900-3646	TRANSISTOR 2N3646	599747
41	Q 27	900-3646	TRANSISTOR 2N3646	599747
41	Q 28	900-3646	TRANSISTOR 2N3646	599747
41	Q 29	900-3646	TRANSISTOR 2N3646	599747
41	Q 30	900-3646	TRANSISTOR 2N3646	599747
41	Q 31	900-3646	TRANSISTOR 2N3646	599747
41	Q 32	900-3646	TRANSISTOR 2N3646	599747
43	Q 33	900-3705	TRANSISTOR 2N3705	599747
42	Q 34	900-3702	TRANSISTOR 2N3702	599747
41	Q 35	900-3646	TRANSISTOR 2N3646	599747
41	Q 36	900-3646	TRANSISTOR 2N3646	599747
41	Q 37	900-3646	TRANSISTOR 2N3646	599747
41	Q 38	900-3646	TRANSISTOR 2N3646	599747
41	Q 39	900-3646	TRANSISTOR 2N3646	599747
41	Q 40	900-3646	TRANSISTOR 2N3646	599747
41	Q 41	900-3646	TRANSISTOR 2N3646	599747
41	Q 42	900-3646	TRANSISTOR 2N3646	599747
41	Q 43	900-3646	TRANSISTOR 2N3646	599747
41	Q 44	900-3646	TRANSISTOR 2N3646	599747
52	R 1	3838-0201	RES 200 OHMS VAR	599747
37	R 2	739-0006	RES 21X60K 0X1 PC	599747
33	R 3	739-0002	RES 6X131K 0X1 PC	599747
34	R 4	739-0003	RES 7X944K 0X1 PC	599747
36	R 5	739-0005	RES 12X48K 0X1 PC	599747
38	R 6	739-0007	RES 27X57K 0X1 PC	599747
32	R 7	739-0001	RES 4X220K 0X1 PC	599747
32	R 8	739-0001	RES 4X220K 0X1 PC	599747
32	R 9	739-0001	RES 4X220K 0X1 PC	599747
32	R 10	739-0001	RES 4X220K 0X1 PC	599747
26	R 11	212-1471	RES 1X47K 1X0 PC	599747
35	R 12	739-0004	RES 10X0K 1X0 PC	599747
23	R 13	200-0561	RES 560 OHMS	599747
29	R 14	212-3162	RES 31X6K	599747
22	R 15	200-0560	RES 56 OHMS	599747
21	R 16	200-0472	RES 4X7K	599747
21	R 17	200-0472	RES 4X7K	599747
30	R 18	212-5111	RES 5X11K	599747
19	R 19	200-0332	RES 3X3K	599747
19	R 20	200-0332	RES 3X3K	599747
19	R 21	200-0332	RES 3X3K	599747
19	R 22	200-0332	RES 3X3K	599747
27	R 23	212-2872	RES 28X7K	599747
31	R 24	212-5621	RES 5X62K	599747
20	R 25	200-0392	RES 3X9K	599747
20	R 26	200-0392	RES 3X9K	599747
20	R 27	200-0392	RES 3X9K	599747
20	R 28	200-0392	RES 3X9K	599747
52	R 29	3838-0201	RES 200 OHMS VAR	599747
37	R 30	739-0006	RES 21X60K 0X1 PC	599747
33	R 31	739-0002	RES 6X131K 0X1 PC	599747
34	R 32	739-0003	RES 7X944K 0X1 PC	599747
36	R 33	739-0005	RES 12X48K 0X1 PC	599747
38	R 34	739-0007	RES 27X57K 0X1 PC	599747
26	R 35	212-1471	RES 1X47K	599747

ITEM NUMBER	REFERENCE DESIGNATION	T R A C O R STOCK NUMBER	DESCRIPTION	STOCK NUMBER USED ON
29	R 36	212-3162	RES 31X6K	599747
22	R 37	200-0560	RES 56 OHMS	599747
23	R 38	200-0561	RES 560 OHMS	599747
32	R 39	739-0001	RES 4X220K 0X1 PC	599747
32	R 40	739-0001	RES 4X220K 0X1 PC	599747
32	R 41	739-0001	RES 4X220K 0X1 PC	599747
32	R 42	739-0001	RES 4X220K 0X1 PC	599747
35	R 43	739-0004	RES 10X0K 1X0 PC	599747
20	R 44	200-0392	RES 3X9K	599747
20	R 45	200-0392	RES 3X9K	599747
30	R 46	212-5111	RES 5X11K	599747
15	R 47	200-0103	RES 10K	599747
15	R 48	200-0103	RES 10K	599747
19	R 49	200-0332	RES 3X3K	599747
19	R 50	200-0332	RES 3X3K	599747
19	R 51	200-0332	RES 3X3K	599747
19	R 52	200-0332	RES 3X3K	599747
27	R 53	212-2872	RES 28X7K	599747
31	R 54	212-5621	RES 5X62K	599747
15	R 55	200-0103	RES 10K	599747
15	R 56	200-0103	RES 10K	599747
15	R 57	200-0103	RES 10K	599747
15	R 58	200-0103	RES 10K	599747
14	R 59	200-0102	RES 1K	599747
24	R 60	200-0822	RES 8X2K	599747
15	R 61	200-0103	RES 10K	599747
15	R 62	200-0103	RES 10K	599747
24	R 63	200-0822	RES 8X2K	599747
14	R 64	200-0102	RES 1K	599747
15	R 65	200-0103	RES 10K	599747
15	R 66	200-0103	RES 10K	599747
15	R 67	200-0103	RES 10K	599747
15	R 68	200-0103	RES 10K	599747
14	R 69	200-0102	RES 1K	599747
24	R 70	200-0822	RES 8X2K	599747
15	R 71	200-0103	RES 10K	599747
15	R 72	200-0103	RES 10K	599747
24	R 73	200-0822	RES 8X2K	599747
14	R 74	200-0102	RES 1K	599747
15	R 75	200-0103	RES 10K	599747
15	R 76	200-0103	RES 10K	599747
15	R 77	200-0103	RES 10K	599747
15	R 78	200-0103	RES 10K	599747
14	R 79	200-0102	RES 1K	599747
24	R 80	200-0822	RES 8X2K	599747
15	R 81	200-0103	RES 10K	599747
15	R 82	200-0103	RES 10K	599747
24	R 83	200-0822	RES 8X2K	599747
14	R 84	200-0102	RES 1K	599747
15	R 85	200-0103	RES 10K	599747
15	R 86	200-0103	RES 10K	599747
15	R 87	200-0103	RES 10K	599747
15	R 88	200-0103	RES 10K	599747
14	R 89	200-0102	RES 1K	599747
24	R 90	200-0822	RES 8X2K	599747
15	R 91	200-0103	RES 10K	599747
15	R 92	200-0103	RES 10K	599747
24	R 93	200-0822	RES 8X2K	599747
14	R 94	200-0102	RES 1K	599747
15	R 95	200-0103	RES 10K	599747
15	R 96	200-0103	RES 10K	599747
17	R 97	200-0221	RES 220 OHMS	599747
28	R 98	212-2873	RES 287K	599747
15	R 99	200-0103	RES 10K	599747
15	R 100	200-0103	RES 10K	599747
17	R 102	200-0221	RES 220 OHMS	599747
16	R 103	200-0122	RES 1X2K	599747
14	R 104	200-0102	RES 1K	599747
14	R 105	200-0102	RES 1K	599747
14	R 106	200-0102	RES 1K	599747
21	R 107	200-0472	RES 4X7K	599747
28	R 108	212-2873	RES 287K	599747
15	R 110	200-0103	RES 10K	599747
15	R 111	200-0103	RES 10K	599747
14	R 112	200-0102	RES 1K	599747
24	R 113	200-0822	RES 8X2K	599747
15	R 114	200-0103	RES 10K	599747

ITEM NUMBER	REFERENCE DESIGNATION	T R A C O R STOCK NUMBER	DESCRIPTION	STOCK NUMBER USED ON
15	R 115	200-0103	RES 10K	599747
24	R 116	200-0822	RES 8X2K	599747
14	R 117	200-0102	RES 1K	599747
15	R 118	200-0103	RES 10K	599747
15	R 119	200-0103	RES 10K	599747
15	R 120	200-0103	RES 10K	599747
15	R 121	200-0103	RES 10K	599747
14	R 122	200-0102	RES 1K	599747
24	R 123	200-0822	RES 8X2K	599747
15	R 124	200-0103	RES 10K	599747
15	R 125	200-0103	RES 10K	599747
24	R 126	200-0822	RES 8X2K	599747
14	R 127	200-0102	RES 1K	599747
15	R 128	200-0103	RES 10K	599747
15	R 129	200-0103	RES 10K	599747
15	R 130	200-0103	RES 10K	599747
15	R 131	200-0103	RES 10K	599747
14	R 132	200-0102	RES 1K	599747
24	R 133	200-0822	RES 8X2K	599747
15	R 134	200-0103	RES 10K	599747
15	R 135	200-0103	RES 10K	599747
24	R 136	200-0822	RES 8X2K	599747
14	R 137	200-0102	RES 1K	599747
15	R 138	200-0103	RES 10K	599747
15	R 139	200-0103	RES 10K	599747
13	R 140	200-0101	RES 100 OHMS	599747
12	R 142	200-0100	RES 10 OHMS	599747
12	R 143	200-0100	RES 10 OHMS	599747
25	R 144	200-9331	RES 3X3 OHMS	599747
15	R 145	200-0103	RES 10K	599747
15	R 146	200-0103	RES 10K	599747
15	R 147	200-0103	RES 10K	599747
12	R 148	200-0100	RES 10 OHMS	599747
18	R 149	200-0223	RES 22K	599747
18	R 150	200-0223	RES 22K	599747
18	R 151	200-0223	RES 22K	599747
22	R 152	200-0560	RES 56 OHMS	599747
18	R 153	200-0223	RES 22K	599747
22	R 154	200-0560	RES 56 OHMS	599747
17	R 155	200-0221	RES 220 OHMS	599747
17	R 156	200-0221	RES 220 OHMS	599747
39	CR 1	800-0914	DIODE IN914	599747
39	CR 2	800-0914	DIODE IN914	599747
39	CR 3	800-0914	DIODE IN914	599747
39	CR 4	800-0914	DIODE IN914	599747
39	CR 5	800-0914	DIODE IN914	599747
39	CR 6	800-0914	DIODE IN914	599747
39	CR 7	800-0914	DIODE IN914	599747
39	CR 8	800-0914	DIODE IN914	599747
39	CR 9	800-0914	DIODE IN914	599747
39	CR 10	800-0914	DIODE IN914	599747
39	CR 11	800-0914	DIODE IN914	599747
39	CR 12	800-0914	DIODE IN914	599747
39	CR 13	800-0914	DIODE IN914	599747
39	CR 14	800-0914	DIODE IN914	599747
			RCVR/SYN/REC MOD ASSY	599749-0002
1		175-0016	SCR BND HD 4-40X1/4	599749-0002
2		175-0024	SCR BND HD 4-40X3/8	599749-0002
3		175-0032	SCR BND HD 4-40X1/2	599749-0002
4		177-0016	SCR BND HD 6-32X1/4	599749-0002
5		177-0024	SCR BND HD 6-32X3/8	599749-0002
6		177-0032	SCR BND HD 6-32X1/2	599749-0002
7		218-0024	SCR FLT HD 4-40X3/8	599749-0002
8		365-0032	SCR HEX HD 4-40X1/2	599749-0002
9		399-0024	SCR SKT HD 4-40X3/8	599749-0002
10		611-0053	FERRULE	599749-0002
11		612-0003	HANDLE	599749-0002
12		617-0267	WASHER FLAT NO 6	599749-0002
13		620-0123	WASHER IT LOCK NO 4	599749-0002
14		620-0125	WASHER IT LOCK NO 6	599749-0002
15		639-0010	WASHER NYLON NO 4	599749-0002
16		649-0074	NUT 4-40	599749-0002
17		649-0114	NUT 6-32	599749-0002
18		3326-0032	RIVET POP 3/32X212	599749-0002

ITEM NUMBER	REFERENCE DESIGNATION	TRACOR STOCK NUMBER	DESCRIPTION	STOCK NUMBER USED ON
19		3326-0042	RIVET POP 1/8 X232	599749-0002
20		3326-0043	RIVET POP 1/8 X294	599749-0002
21		3326-0046	RIVET POP 1/8 X481	599749-0002
22		3331-0032	NUT CLINCH 6-32	599749-0002
24		3455-0772	CLAMP CABLE 3/16 DIA	599749-0002
27		3475-0001	SCR CAPTIVE 6-32	599749-0002
35		3805-0011	BOLTS SPADE 6 32	599749-0002
39		3898-0001	CLIP LAMP	599749-0002
41		5586-0036	STANDOFF 3/16X0.562 L	599749-0002
42		5586-0108	STANDOFF 3/16X1.125 L	599749-0002
43		5586-0124	STANDOFF 3/16X1.375 L	599749-0002
44		5586-0200	STANDOFF 3/16X2.000 L	599749-0002
46		8819-0022	BUS WIRE AS REQD	599749-0002
48		599209	COVER MODULE	599749-0002
49		599210	COVER ACCESS	599749-0002
50		599211	SHIELD/CHASSIS BRACE	599749-0002
51		599213	SUPPORT CHASSIS	599749-0002
52		599217	BRACKET RECORDER	599749-0002
53		599249	GUIDE PCB	599749-0002
55		599268	CHASSIS BOTTOM	599749-0002
56		599272	CHASSIS SUB FRONT	599749-0002
57		599284	SPACER/ACTUATOR	599749-0002
58		599657	PANEL FRONT	599749-0002
59		599658	CHASSIS RCVR/SYN/REC	599749-0002
60		599704	CLAMP SPEAKER	599749-0002
65		599740	PANEL REAR	599749-0002
71		599801	COVER	599749-0002
72		599274	BAR PCB CHASSIS	599749-0002
76		3807-0001	RUBBER STRIP	599749-0002
61	A 2	599735	PCB ASSY REF DIVIDER	599749-0002
62	A 3	599736	PCB ASSY PH DET/VCO	599749-0002
63	A 4	599737	PCB ASSY 1ST DECADE	599749-0002
64	A 5	599738	PCB ASSY 2/3 DECADE	599749-0002
66	A 6	9748	PCB ASSY RF PREAMP	599749-0002
67	A 7	599746	PCB ASSY IF AMPLIFIER	599749-0002
68	A 8	599747	PCB ASSY SEQ/DUAL MOD	599749-0002
70	A 9	599751	HARNESS WIRING ASSY	599749-0002
45	A 10	6734	SWITCH THUMBWHEEL ASY	599749-0002
47	C 1	8918-0331	CAP 330 MFD 6V	599749-0002
47	C 2	8918-0331	CAP 330 MFD 6V	599749-0002
36	E 1	3877-0020	TERMINAL	599749-0002
32	E 2	3624-0001	LUG SOLDER NO 4	599749-0002
36	E 3	3877-0020	TERMINAL	599749-0002
32	E 4	3624-0001	LUG SOLDER NO 4	599749-0002
36	E 5	3877-0020	TERMINAL	599749-0002
36	E 6	3877-0020	TERMINAL	599749-0002
32	E 8	3624-0001	LUG SOLDER NO 4	599749-0002
25	E 9	3458-0001	KNOB	599749-0002
26	E 10	3458-0165	KNOB	599749-0002
23	J 12	3448-0005	JACK EARPHONE	599749-0002
33	J 13	3648-0008	CONNECTOR 6 PIN	599749-0002
30	R 1	3578-0102	RESISTOR VARIABLE 1K	599749-0002
31	R 2	3608-0102	RESISTOR VARIABLE 1K	599749-0002
31	R 3	3608-0102	RESISTOR VARIABLE 1K	599749-0002
29	R 4	3507-0502	VARIABLE RESISTOR 5K	599749-0002
28	S 1	3490-0003	SWITCH TOGGLE DPDT	599749-0002
28	S 2	3490-0003	SWITCH TOGGLE DPDT	599749-0002
37	DS 1	3897-0001	LAMP INDICATOR 10V	599749-0002
38	DS 2	3897-0006	LAMP INDICATOR 6X3V	599749-0002
34	LS 1	3649-0004	SPEAKER 12 OHM 2 3/4D	599749-0002
40	XDS 1	3899-0002	SOCKET LAMP	599749-0002
40	XDS 2	3899-0002	SOCKET LAMP	599749-0002
			HARNESS WIRING ASSY	599751
3		706-0010	WIRE 26 AWG BLK	599751
4		706-0110	WIRE 26 AWG BRN	599751
5		706-0210	WIRE 26 AWG RED	599751
6		706-0310	WIRE 26 AWG ORN	599751
7		706-0410	WIRE 26 AWG YEL	599751
8		706-0510	WIRE 26 AWG GRN	599751
9		706-0610	WIRE 26 AWG BLU	599751
10		706-0710	WIRE 26 AWG VIO	599751
11		706-0810	WIRE 26 AWG GY	599751
13		706-0901	WIRE 26 AWG WH/BRN	599751
14		706-0902	WIRE 26 AWG WH/RED	599751

ITEM NUMBER	REFERENCE DESIGNATION	T R A C O R STOCK NUMBER	DESCRIPTION	STOCK NUMBER USED ON
15		706-0903	WIRE 26 AWG WH/ORN	599751
16		706-0904	WIRE 26 AWG WH/YEL	599751
17		706-0905	WIRE 26 AWG WH/GRN	599751
18		706-0906	WIRE 26 AWG WH/BLU	599751
19		706-0907	WIRE 26 AWG WH/VIO	599751
20		706-0908	WIRE 26 AWG WH/GRY	599751
21		706-0910	WIRE 26 AWG WHITE	599751
29		3388-0092	CABLE COAXIAL	599751
30		8819-0022	WIRE BUS 22AWG	599751
22	J 1	3318-5016	CONNECTOR PCB 22 PIN	599751
22	J 2	3318-5016	CONNECTOR PCB 22 PIN	599751
22	J 3	3318-5016	CONNECTOR PCB 22 PIN	599751
22	J 4	3318-5016	CONNECTOR PCB 22 PIN	599751
22	J 5	3318-5016	CONNECTOR PCB 22 PIN	599751
22	J 6	3318-5016	CONNECTOR PCB 22 PIN	599751
22	J 7	3318-5016	CONNECTOR PCB 22 PIN	599751
22	J 8	3318-5016	CONNECTOR PCB 22 PIN	599751
26	J 9	3628-0010	CONNECTOR PCB 10 PIN	599751
26	J 10	3628-0010	CONNECTOR PCB 10 PIN	599751
26	J 11	3628-0010	CONNECTOR PCB 10 PIN	599751
25	P 1	3394-0004	CONNECTOR 24 PIN	599751
25	P 2	3394-0004	CONNECTOR 24 PIN	599751
1	R 5	211-1103	RES FXD FILM 110K	599751
			ASSY AGC/PHASE MODULE	599761
3		175-0016	SCR BIND HD 4 40X1/4	599761
4		175-0020	SCR BIND HD 4 40X5/16	599761
5		175-0032	SCR BIND HD 4 40X1/2	599761
6		177-0016	SCR BIND HD 6 32X1/4	599761
7		177-0020	SCR BIND HD 6 32X5/16	599761
8		365-0024	SCR HEX HD 4 40X3/8	599761
9		561-0024	SCR HEX SOC 6 32X3/8	599761
10		611-0053	FERRULES	599761
11		612-0003	HANDLE	599761
12		617-0256	WASHER FLAT NO 4	599761
13		617-0267	WASHER FLAT NO 6	599761
14		620-0123	WASHER LOCK IT N04	599761
15		620-0125	WASHER LOCK IT N06	599761
16		639-0006	WASHER NYLON N04	599761
17		649-0074	NUT 4 40	599761
18		649-0114	NUT 6 32	599761
20		3326-0032	RIVET POP	599761
21		3326-0042	RIVET POP	599761
22		3331-0022	NUT CLINCH 4 40	599761
23		3331-0037	NUT CLINCH 6 32	599761
24		3429	MTG KIT TSTR	599761
27		3455-0773	CLAMP CABLE	599761
30		3475-0001	SCR CAP 6 32	599761
33		5057-0032	STANDOFF 4 40X1/2	599761
34		5067-0048	STANDOFF 6 32X3/4	599761
35		6152	PLATE IDENTIFICATION	599761
36		21472-0003	INK MARKING AS REQD	599761
37		8145	CHANNEL BOTTOM	599761
38		599028	RAIL TOP	599761
39		599029	RAIL BOTTOM	599761
40		599034	BRKT COMP MTG	599761
41		599038	COVER	599761
42		599077	HEATSINK	599761
43		599105	BRKT CAP MTG	599761
47		599742	PANEL REAR	599761
51		599824	PANEL FRONT	599761
49	A 1	599797	ASSY WIRING HARNESS	599761
50	A 2	599799	ASSY TERMINAL BOARD	599761
52	A 3	599829	ASSY PCB	599761
55	A 4	599849	PCB ASSY AGC JUMPER	599761
31	C 302	3482-0001	CAP 1000/1000 MFD	599761
31	C 307	3482-0001	CAP 1000/1000 MFD	599761
28	K 301	3468-1103	RELAY	599761
44	M 301	599109	METER	599761
46	M 302	599483	METER	599761
19	Q 1	7173	TSTR ASSY 2N673 MOD	599761
19	Q 2	7173	TSTR ASSY 2N673 MOD	599761
19	Q 314	7173	TSTR ASSY 2N673 MOD	599761
19	Q 315	7173	TSTR ASSY 2N673 MOD	599761
32	R 13	3583-0103	RES VAR 10K	599761

ITEM NUMBER	REFERENCE DESIGNATION	T R A C O R STOCK NUMBER	DESCRIPTION	STOCK NUMBER USED ON
45	T 301	599180	TRANSFORMER	599761
1	DS 301	87-0321	LAMP MINAT	599761
2	DS 302	87-0364	LAMP MINAT	599761
29	XK 301	3469-0001	SOCKET RELAY	599761
26	XDS 301	3440-2900	HOLDER INDICATOR LAMP	599761
25	XDS 302	3440-2200	HOLDER INDICATOR LAMP	599761
			RCVR ASSY MODEL 599J	599763
1		177-0024	SCR BND HD 6 32X3/8	599763
2		620-0125	WASHER IT LOCK NO 6	599763
3		3326-0032	RIVET POP 093X212	599763
4		6152	PLATE IDENT	599763
19	A 1	599749-0002	RCVR/SYN/REC MOD ASSY	599763
20	A 2	599761	AGC/PHASE MODULE ASSY	599763
7	A 3	599394-0002	PHASE SERVO MOD ASSY	599763
17	A 4	599723	POWER SUPPLY MOD ASSY	599763
5	A 5	599378	CHASSIS ASSEMBLY	599763
21	A 6	599768	CONN PANEL ASSEMBLY	599763
25	A 7	599772	ACCESSORY PARTS ASSY	599763
			PANEL CONN ASSY 599J	599768
1		90-0142	TERMINAL INSULATED	599768
2		175-0024	SCR BIND HD 4 40X3/8	599768
3		177-0020	SCR BIND HD 6 32X5/16	599768
4		177-0032	SCR BIND HD 6 32X1/2	599768
10		242-0024	SCR FIL HD 6 32X3/8	599768
11		617-0267	WASHER FLAT NO 6	599768
12		620-0123	WASHER LOCK INT NO 4	599768
13		620-0125	WASHER LOCK INT NO 6	599768
15		649-0074	NUT 4 40	599768
16		649-0114	NUT 6 32	599768
21		3326-0042	RIVET POP	599768
22		3326-0043	RIVET POP	599768
24		3426-0085	TUBING INSUL	599768
25		3428-0002	MTG KIT TSTR	599768
26		3446-0007	BRAID	599768
28		3486-0005	LUG SOLDER NO 6	599768
29		3486-0027	LUG SOLDER 3/8	599768
35		3803-0024	PLUG SNAP	599768
36		5606-0116	STANDOFF 6 32X1X25	599768
37		599023	BRKT CONN PANEL	599768
38		599059	COVER COMPONENT	599768
39		599079	BUS GROUND INTERNAL	599768
40		599106	STANDOFF	599768
41		599312	BUS GROUND EXTERNAL	599768
42		599314	INSULATOR ANT INPUT	599768
43		599361	PIN GUIDE RECTANGULAR	599768
44		599397	SHELL PROTECTIVE	599768
46		599774	PANEL CONN INTERNAL	599768
49		599850	PANEL CONN EXTERNAL	599768
50		175-0032	SCR BIND HD 4 40X1/2	599768
51		175-0020	SCR BIND HD 4 40X5/16	599768
47	A 1	599776	HARNESS ASSY	599768
20	C 1	3321-9102	CAP CER DISC X1 MFD	599768
23	J 6	3391-0001	CONN COAX UG657/U	599768
23	J 8	3391-0001	CONN COAX UG657/U	599768
23	J 10	3391-0001	CONN COAX UG657/U	599768
23	J 11	3391-0001	CONN COAX UG657/U	599768
23	J 12	3391-0001	CONN COAX UG657/U	599768
23	J 13	3391-0001	CONN COAX UG657/U	599768
23	J 15	3391-0001	CONN COAX UG657/U	599768
27	J 17	3459-0003	CONN PLUG POWER	599768
19	Q 1	900-3055	TSTR NPN 2N3055	599768
18	Q 2	900-1539	TSTR PNP 2N1539	599768
9	R 1	214-9301	RES FXD WW 3 OHM 3W	599768
8	R 2	214-9101	RES FXD WW 1 OHM 3W	599768
6	R 3	208-0102	RES FXD COMP 1K 1/2W	599768
6	R 4	208-0102	RES FXD COMP 1K 1/2W	599768
6	R 5	208-0102	RES FXD COMP 1K 1/2W	599768
7	R 6	208-0821	RES FXD COMP 820 OHM	599768
30	R 7	3522-0502	RES VAR 5K 2W	599768
30	R 8	3522-0502	RES VAR 5K 2W	599768
30	R 9	3522-0502	RES VAR 5K 2W	599768

ITEM/REFERENCE DESIGNATION INDEX DATE 12/11/67

ITEM NUMBER	REFERENCE DESIGNATION	TRACOR STOCK NUMBER	DESCRIPTION	STOCK NUMBER USED ON
33	S 1	3633-0001	SWITCH SLIDE PWR	599768
32	S 2	3573-0001	SWITCH PUSH BUT ZERO	599768
32	S 3	3573-0001	SWITCH PUSH BUT FS	599768
34	S 4	3641-0002	SWITCH SLIDE RECORD	599768
			ASSY ACCESSORY PARTS	599772
1		87-0321	LAMP 2V	599772
2		87-0364	LAMP 28V	599772
3		3346-9201	FUSE 2 AMP	599772
4		3346-9501	FUSE 5 AMP	599772
8		3487-9372	FUSE 3/8 AMP	599772
15		599848	MANUAL OPS SERVICE	599772
14	A 1	599283	ASSY 24 PIN CABLE	599772
14	A 2	599283	ASSY 24 PIN CABLE	599772
13	A 3	599266	ASSY 22 PIN PCB EXT	599772
12	A 4	599168	ASSY ANTENNA CABLE	599772
6	P 1	3392-0011	CONN 16 PIN	599772
5	P 2	3390	CONN BNC PLUG	599772
5	P 3	3390	CONN BNC PLUG	599772
10	P 4	3819-0309	CONNECTOR AUX PWR	599772
7	W 1	3467-0016	CORD EXTENSION	599772
9	CP 1	3559-0002	ADAPTER GROUNDING	599772
16	HT 1	3496-0004	HEAD SET	599772
17	MP 1	3497-0001	CUSHION HEADSET	599772
11	MP 3	3823-0003	CLAMP CABLE AUX PWR	599772
			ASSY WIRING HARNESS	599776
3		703-0010	WIRE 18 AWG BLK	599776
4		703-0110	WIRE 18 AWG BRN	599776
5		703-0210	WIRE 18 AWG RED	599776
6		703-0310	WIRE 18 AWG ORN	599776
7		703-0410	WIRE 18 AWG YEL	599776
15		703-0910	WIRE 18 AWG WHITE	599776
16		705-0110	WIRE 22 AWG BRN	599776
17		705-0210	WIRE 22 AWG RED	599776
18		705-0310	WIRE 22 AWG ORN	599776
19		705-0410	WIRE 22 AWG YEL	599776
20		705-0510	WIRE 22 AWG GRN	599776
21		705-0610	WIRE 22 AWG BLU	599776
22		705-0710	WIRE 22 AWG VIO	599776
23		705-0810	WIRE 22 AWG GRY	599776
24		705-0900	WIRE 22 AWG WH/BLK	599776
25		705-0901	WIRE 22 AWG WH/BRN	599776
26		705-0903	WIRE 22 AWG WH/ORN	599776
27		705-0904	WIRE 22 AWG WH/YEL	599776
28		705-0905	WIRE 22 AWG WH/GRN	599776
29		705-0906	WIRE 22 AWG WH/BLU	599776
30		705-0907	WIRE 22 AWG WH/VIO	599776
31		705-0908	WIRE 22 AWG WH/GRY	599776
32		705-0910	WIRE 22 AWG WHITE	599776
33		3388-0092	CABLE COAX RG/178U	599776
36		3426-0017	TEFLON TUBING NO 22	599776
38		8819-0022	WIRE 22AWG BUS	599776
42		705-0010	WIRE 22AWG BLK	599776
43		8819-0018	WIRE 18AWG BUS	599776
39	C 2	8917-0121	CAPACITOR 120 MFD 10V	599776
39	C 3	8917-0121	CAPACITOR 120 MFD 10V	599776
35	J 1	3394-1004	CONN BLUE RIBBON 24S	599776
35	J 2	3394-1004	CONN BLUE RIBBON 24S	599776
35	J 3	3394-1004	CONN BLUE RIBBON 24S	599776
35	J 4	3394-1004	CONN BLUE RIBBON 24S	599776
35	J 5	3394-1004	CONN BLUE RIBBON 24S	599776
34	J 16	3392-1006	CONN BLUE RIBBON 16S	599776
37	J 18	3817-2003	CONN STANDBY PWR	599776
2	R 11	200-0333	RESISTOR 33K	599776
1	R 12	200-0220	RESISTOR 22 OHMS	599776
1	R 13	200-0220	RESISTOR 22 OHMS	599776
			ASSY WIRING HARNESS	599797
1		703-0010	WIRE 18AWG BLK	599797
2		703-0210	WIRE 18AWG RED	599797

ITEM NUMBER	REFERENCE DESIGNATION	TRACOR STOCK NUMBER	DESCRIPTION	STOCK NUMBER USED ON
3		703-0410	WIRE 18AWG YEL	599797
4		705-0010	WIRE 22AWG BLK	599797
5		705-0110	WIRE 22AWG BRN	599797
6		705-0210	WIRE 22AWG RED	599797
7		705-0310	WIRE 22AWG ORN	599797
8		705-0410	WIRE 22AWG YEL	599797
9		705-0510	WIRE 22AWG GRN	599797
10		705-0610	WIRE 22AWG BLUE	599797
11		705-0710	WIRE 22AWG VIO	599797
12		705-0810	WIRE 22AWG GREY	599797
13		705-0900	WIRE 22AWG WHT/BLK	599797
14		705-0901	WIRE 22AWG WHT/BRN	599797
15		705-0902	WIRE 22AWG WHT/RED	599797
16		705-0903	WIRE 22AWG WHT/ORN	599797
17		705-0904	WIRE 22AWG WHT/YEL	599797
18		705-0905	WIRE 22AWG WHT/GRN	599797
19		705-0906	WIRE 22AWG WHT/BLUE	599797
20		705-0907	WIRE 22AWG WHT/VIO	599797
21		705-0908	WIRE 22AWG WHT/GREY	599797
22		705-0910	WIRE 22AWG WHT	599797
23		706-0010	WIRE 26AWG BLK	599797
24		706-0110	WIRE 26AWG BRN	599797
25		706-0310	WIRE 26AWG ORN	599797
26		706-0410	WIRE 26AWG YEL	599797
27		706-0510	WIRE 26AWG GRN	599797
28		706-0610	WIRE 26AWG BLUE	599797
29		706-0810	WIRE 26AWG GREY	599797
30		706-0902	WIRE 26AWG WHT/RED	599797
31		706-0908	WIRE 26AWG WHT/GREY	599797
32		706-0910	WIRE 26AWG WHT	599797
33		3388-0116	CABLE COAX RG/174U	599797
34		3389-0011	CORD LACING	599797
36		3486-0001	LUG SOLDER NO 4	599797
37		3486-0009	LUG SOLDER NO 8	599797
38	J 302	3628-0015	CONNECTOR	599797
35	P 301	3394-0004	CONN 24P	599797
			ASSY TB CARRIER CHAN	599799
1		599831	BOARD TERMINAL	599799
2		610-0742	TERMINAL	599799
3		173-0032	SCR BIND HD 2 56X1/2	599799
4		617-0248	WASHER FLAT NO 2	599799
5		620-0121	WASHER IT NO 2	599799
6		649-0034	NUT 2 56	599799
7		8819-0018	BUS WIRE NO 18AWG	599799
8		3426-0029	TUBING INSUL	599799
41		3426-0017	TUBING INSUL	599799
40	C 1	3335-0101	CAP 100 MFD 3V	599799
44	C 2	3921-0121	CAP 120 MFD 15V	599799
39	C 3	3317-9473	CAP X047 MFD 200V	599799
45	C 4	8914-0150	CAP 15 MFD 20V	599799
46	C 5	8918-0560	CAP 56 MFD 6V	599799
39	C 7	3317-9473	CAP X047 MFD 200V	599799
49	C 8	8917-0390	CAP 39 MFD 10V	599799
36	Q 3	900-1995	TSTR NPN 2N1995	599799
35	Q 4	900-1319	TSTR PNP 2N1319	599799
38	Q 5	900-3134	TSTR PNP 2N3134	599799
38	Q 6	900-3134	TSTR PNP 2N3134	599799
47	Q 7	599357	TSTR MATCHED W Q8	599799
47	Q 8	599357	TSTR MATCHED W Q7	599799
38	Q 9	900-3134	TSTR PNP 2N3134	599799
38	Q 10	900-3134	TSTR PNP 2N3134	599799
37	Q 11	900-2270	TSTR NPN 2N2270	599799
38	Q 12	900-3134	TSTR PNP 2N3134	599799
37	Q 13	900-2270	TSTR NPN 2N2270	599799
37	Q 14	900-2270	TSTR NPN 2N2270	599799
38	Q 15	900-3134	TSTR PNP 2N3134	599799
33	R 1	208-0822	RES FXD COMP 8X2K	599799
26	R 2	208-0271	RES FXD COMP 270 OHM	599799
27	R 3	208-0331	RES FXD COMP 330 OHM	599799
30	R 4	208-0560	RES FXD COMP 56 OHM	599799
23	R 5	208-0152	RES FXD COMP 1X5K	599799
28	R 6	208-0332	RES FXD COMP 3X3K	599799
28	R 7	208-0332	RES FXD COMP 3X3K	599799
32	R 8	208-0680	RES FXD COMP 68 OHM	599799

ITEM NUMBER	REFERENCE DESIGNATION	TRACOR STOCK NUMBER	DESCRIPTION	STOCK NUMBER USED ON
28	R 9	208-0332	RES FXD COMP 3X3K	599799
10	R 10	205-1003	RES FXD FILM 100K	599799
21	R 11	208-0101	RES FXD COMP 100 OHM	599799
14	R 12	205-2151	RES FXD FLM 2X15K	599795
15	R 13	205-2619	RES FXD FILM 26X1 OHM	599799
43	R 14	3580-0500	RES VAR 50 OHM	599799
15	R 15	205-2619	RES FXD FLM 26X1 OHM	599799
13	R 16	205-1961	RES FXD FILM 1X96K	599799
14	R 17	205-2151	RES FXD FILM 2X15K	599799
10	R 18	205-1003	RES FXD FILM 100K	599799
18	R 19	205-6190	RES FXD FILM 619 OHM	599799
42	R 20	3575-0102	RES VAR 1K	599799
17	R 21	205-5112	RES FXD FILM 51X1K	599799
9	R 22	205-1001	RES FXD FILM 1X00K	599799
11	R 23	205-1101	RES FXD FILM 1X10K	599799
11	R 24	205-1101	RES FXD FILM 1X10K	599799
24	R 25	208-0222	RES FXD COMP 2X2K	599799
11	R 26	205-1101	RES FXD FILM 1X10K	599799
29	R 27	208-0471	RES FXD COMP 470 OHM	599799
12	R 28	205-1330	RES FXD FILM 133 OHM	599799
21	R 29	208-0101	RES FXD COMP 100 OHM	599799
16	R 30	205-4220	RES FXD FILM 422 OHM	599799
20	R 31	205-8250	RES FXD FILM 825 OHM	599799
31	R 32	208-0562	RES FXD COMP 5X6K	599799
19	R 33	205-5902	RES FXD FILM 59.0K	599799
25	R 34	208-0224	RES FXD COMP 220K	599799
22	R 35	208-0103	RES FXD COMP 10K	599799
17	R 36	205-5112	RES FXD FILM 51X1K	599799
34	CR 1	801-0456	DIODE IN456A	599799
			ASSY PCB PHASE CHAN	599829
1		599355	BOARD PRINTED CIRCUIT	599829
2		82	INSULATOR TSTR	599829
3		599058	HEATSINK	599829
4		177-0024	SCREW BIND HD 6 32	599829
5		620-0125	WASHER LOCK IT NO 6	599829
6		620-0126	WASHER LOCK IT NO 8	599829
7		617-0267	WASHER FLAT NO 6	599829
8		617-0270	WASHER FLAT NO 8	599829
9		649-0114	NUT 6 32	599829
10		649-0134	NUT 8 32	599829
11		8819-0022	BUS WIRE NO 22AWG	599829
44		21472-0003	INK MARKING AS REQD	599829
41	C 1	3335-0101	CAP 100 MFD 3V	599829
43	C 2	3611-9473	CAP X047 MFD 200V	599829
40	C 3	3324-9475	CAP 470 PFD 200V	599829
39	C 4	3324-9104	CAP X001 MFD 200V	599829
38	C 5	3317-9332	CAP X33 MFD 200V	599829
42	C 6	3338-0251	CAP 250 MFD 12V	599829
42	C 7	3338-0251	CAP 250 MFD 12V	599829
42	C 8	3338-0251	CAP 250 MFD 12V	599829
36	Q 3	900-1995	TSTR NPN 2N1995	599829
35	Q 4	900-1319	TSTR PNP 2N1319	599829
45	Q 5	599391	TSTR MATCHED W Q 6	599829
45	Q 6	599391	TSTR MATCHED W Q 5	599829
37	Q 7	900-3134	TSTR PNP 2N3134	599829
37	Q 8	900-3134	TSTR PNP 2N3134	599829
33	Q 9	900-1304	TSTR NPN 2N1304	599829
34	Q 10	900-1305	TSTR PNP 2N1305	599829
34	Q 11	900-1305	TSTR PNP 2N1305	599829
34	Q 12	900-1305	TSTR PNP 2N1305	599829
32	Q 13	7173	ASSY 2N673 MOD	599829
19	R 1	208-0271	RES FXD COMP 270 OHM	599829
20	R 2	208-0331	RES FXD COMP 330 OHM	599829
24	R 3	208-0560	RES FXD COMP 56 OHM	599829
26	R 4	208-0680	RES FXD COMP 68 OHM	599829
21	R 5	208-0332	RES FXD COMP 3X3K	599829
21	R 6	208-0332	RES FXD COMP 3X3K	599829
13	R 7	205-3161	RES FXD FILM 3X16K	599829
23	R 8	208-0473	RES FXD COMP 47K	599829
23	R 9	208-0473	RES FXD COMP 47K	599829
14	R 10	205-5621	RES FXD FILM 5X62K	599829
13	R 11	205-3161	RES FXD FILM 3X16K	599829
15	R 12	205-9093	RES FXD FILM 909K	599829
14	R 14	205-5621	RES FXD FILM 5X62K	599829

ITEM NUMBER	REFERENCE DESIGNATION	T R A C O R STOCK NUMBER	DESCRIPTION	STOCK NUMBER USED ON
26	R 15	208-0680	RES FXD COMP 68 OHM	599829
26	R 16	208-0680	RES FXD COMP 68 OHM	599829
27	R 17	208-0681	RES FXD COMP 680 OHM	599829
28	R 18	211-1211	RES FXD FILM 1X21K	599829
12	R 19	205-1963	RES FXD FILM 196K	599829
22	R 20	208-0393	RES FXD COMP 39K	599829
17	R 21	208-0103	RES FXD COMP 10K	599829
25	R 22	208-0562	RES FXD COMP 5X6K	599829
17	R 23	208-0103	RES FXD COMP 10K	599829
16	R 24	208-0100	RES FXD COMP 10 OHM	599829
24	R 25	208-0560	RES FXD COMP 56 OHM	599829
18	R 26	208-0151	RES FXD COMP 150 OHM	599829
25	R 27	208-0562	RES FXD COMP 5X6K	599829
29	R 34	211-2371	RES FXD FILM 2X37K	599829
30	CR 1	801-0456	DIODE IN456A	599829
30	CR 2	801-0456	DIODE IN456A	599829
31	VR 1	801-0752	DIODE IN752A	599829
31	VR 2	801-0752	DIODE IN752A	599829
			PCB ASSY AGC JUMPER	599849
2		599788	BOARD PC	599849
3	R 360	200-0392	RES FXD COMP 3X9K	599849

TRACOR STOCK NUMBER	DESCRIPTION	MFGR CODE	MANUFACTURER PART NUMBER	TOTAL QUANTITY	U/M
82	INSULATOR TSTR PAD	17069	88000	79.	EA
87-0321	LAMP BULB INCD .120W	08806	49	2.	EA
87-0364	LAMP BULB INCD 1.96W	08806	1829	5.	EA
90-0142	TERMINAL TFE INSUL PM	71729	4267-1	5.	EA
94-0026	TUBING IHS 1/8 ID BLK	70331	FIT-221-1/8 BLK	48.	IN
95-0003	TUBING I NO 20 ID CLR	70331	PVC-105/20 CLR	12.	IN
95-0025	TUBING I 3/8 ID CLR	70331	PVC-105/3/8 CLR	72.	IN
173-0032	SCR BND HD 2-56X1/2	73734	4006	4.	EA
175-0016	SCR BND HD 4-40X1/4	73734	4022	26.	EA
175-0020	SCR BND HD 4-40X5/16	73734	4023	28.	EA
175-0024	SCR BND HD 4-40X3/8	73734	4024	23.	EA
175-0032	SCR BND HD 4-40X1/2	73734	4026	40.	EA
177-0016	SCR BND HD 6-32X1/4	73734	4032	41.	EA
177-0020	SCR BND HD 6-32X5/16	73734	4033	65.	EA
177-0024	SCR BND HD 6-32X3/8	73734	4034	25.	EA
177-0032	SCR BND HD 6-32X1/2	73734	4036	4.	EA
200-0100	RES FXD COMP 10 OHM	01121	RC07GF100K (MIL-R-11/8)	24.	EA
200-0101	RES FXD COMP 100 OHM	01121	RC07GF101K (MIL-R-11/8)	23.	EA
200-0102	RES FXD COMP 1 K	01121	RC07GF102K (MIL-R-11/8)	97.	EA
200-0103	RES FXD COMP 10 K	01121	RC07GF103K (MIL-R-11/8)	290.	EA
200-0104	RES FXD COMP 100 K	01121	RC07GF104K (MIL-R-11/8)	4.	EA
200-0121	RES FXD COMP 120 OHM	01121	RC07GF121K (MIL-R-11/8)	1.	EA
200-0122	RES FXD COMP 1.2 K	01121	RC07GF122K (MIL-R-11/8)	9.	EA
200-0123	RES FXD COMP 12 K	01121	RC07GF123K (MIL-R-11/8)	2.	EA
200-0150	RES FXD COMP 15 OHM	01121	RC07GF150K (MIL-R-11/8)	1.	EA
200-0151	RES FXD COMP 150 OHM	01121	RC07GF151K (MIL-R-11/8)	4.	EA
200-0152	RES FXD COMP 1.5 K	01121	RC07GF152K (MIL-R-11/8)	8.	EA
200-0181	RES FXD COMP 180 OHM	01121	RC07GF181K (MIL-R-11/8)	1.	EA
200-0183	RES FXD COMP 18 K	01121	RC07GF183K (MIL-R-11/8)	2.	EA
200-0220	RES FXD COMP 22 OHM	01121	RC07GF220K (MIL-R-11/8)	3.	EA
200-0221	RES FXD COMP 220 OHM	01121	RC07GF221K (MIL-R-11/8)	25.	EA
200-0222	RES FXD COMP 2.2 K	01121	RC07GF222K (MIL-R-11/8)	17.	EA
200-0223	RES FXD COMP 22 K	01121	RC07GF223K (MIL-R-11/8)	8.	EA
200-0270	RES FXD COMP 27 OHM	01121	RC07GF270K (MIL-R-11/8)	5.	EA
200-0271	RES FXD COMP 270 OHM	01121	RC07GF271K (MIL-R-11/8)	3.	EA
200-0272	RES FXD COMP 2.7 K	01121	RC07GF272K (MIL-R-11/8)	2.	EA
200-0273	RES FXD COMP 27 K	01121	RC07GF273K (MIL-R-11/8)	10.	EA
200-0330	RES FXD COMP 33 OHM	01121	RC07GF330K (MIL-R-11/8)	4.	EA
200-0331	RES FXD COMP 330 OHM	01121	RC07GF331K (MIL-R-11/8)	9.	EA
200-0332	RES FXD COMP 3.3 K	01121	RC07GF332K (MIL-R-11/8)	15.	EA
200-0333	RES FXD COMP 33 K	01121	RC07GF333K (MIL-R-11/8)	3.	EA
200-0390	RES FXD COMP 39 OHM	01121	RC07GF390K (MIL-R-11/8)	1.	EA
200-0391	RES FXD COMP 390 OHM	01121	RC07GF391K (MIL-R-11/8)	15.	EA
200-0392	RES FXD COMP 3.9 K	01121	RC07GF392K (MIL-R-11/8)	13.	EA
200-0470	RES FXD COMP 47 OHM	01121	RC07GF470K (MIL-R-11/8)	15.	EA
200-0471	RES FXD COMP 470 OHM	01121	RC07GF471K (MIL-R-11/8)	21.	EA
200-0472	RES FXD COMP 4.7 K	01121	RC07GF472K (MIL-R-11/8)	18.	EA
200-0473	RES FXD COMP 47 K	01121	RC07GF473K (MIL-R-11/8)	2.	EA
200-0560	RES FXD COMP 56 OHM	01121	RC07GF560K (MIL-R-11/8)	14.	EA
200-0561	RES FXD COMP 560 OHM	01121	RC07GF561K (MIL-R-11/8)	9.	EA
200-0562	RES FXD COMP 5.6 K	01121	RC07GF562K (MIL-R-11/8)	5.	EA
200-0563	RES FXD COMP 56 K	01121	RC07GF563K (MIL-R-11/8)	2.	EA
200-0564	RES FXD COMP 560 K	01121	RC07GF564K (MIL-R-11/8)	3.	EA
200-0680	RES FXD COMP 68 OHM	01121	RC07GF680K (MIL-R-11/8)	1.	EA
200-0681	RES FXD COMP 680 OHM	01121	RC07GF681K (MIL-R-11/8)	2.	EA
200-0682	RES FXD COMP 6.8 K	01121	RC07GF682K (MIL-R-11/8)	2.	EA
200-0683	RES FXD COMP 68 K	01121	RC07GF683K (MIL-R-11/8)	1.	EA
200-0820	RES FXD COMP 82 OHM	01121	RC07GF820K (MIL-R-11/8)	2.	EA
200-0821	RES FXD COMP 820 OHM	01121	RC07GF821K (MIL-R-11/8)	2.	EA
200-0822	RES FXD COMP 8.2 K	01121	RC07GF822K (MIL-R-11/8)	51.	EA
200-0823	RES FXD COMP 82 K	01121	RC07GF823K (MIL-R-11/8)	2.	EA
200-9271	RES FXD COMP 2.7 OHM	01121	RC07GF2R7K (MIL-R-11/8)	2.	EA
200-9331	RES FXD COMP 3.3 OHM	01121	RC07GF3R3K (MIL-R-11/8)	1.	EA
205-1001	RES FXD FILM 1 K	01295	RN65D1001F (MIL-R-10509/2)	1.	EA
205-1002	RES FXD FILM 10 K	79727	RN65D1002F (MIL-R-10509/2)	2.	EA
205-1003	RES FXD FILM 100 K	79727	RN65D1003F (MIL-R-10509/2)	2.	EA
205-1101	RES FXD FILM 1.1 K	79727	RN65D1101F (MIL-R-10509/2)	3.	EA
205-1102	RES FXD FILM 11 K	79729	RN65D1102F (MIL-R-10509/2)	4.	EA
205-1211	RES FXD FILM 1.21 K	79727	RN65D1211F (MIL-R-10509/2)	2.	EA
205-1330	RES FXD FILM 133 OHM	79727	RN65D1330F (MIL-R-10509/2)	1.	EA
205-1402	RES FXD FILM 14 K	79727	RN65D1402F (MIL-R-10509/2)	1.	EA
205-1542	RES FXD FILM 15X4K	79727	RN65D1542F (MIL-R-10509/2)	1.	EA
205-1622	RES FXD FILM 16.2 K	79727	RN65D1622F (MIL-R-10509/2)	1.	EA
205-1694	RES FXD FILM 1.69 M	17864	RN65D1694F (MIL-R-10509/2)	1.	EA
205-1743	RES FXD FILM 174 K	79727	RN65D1743F (MIL-R-10509/2)	2.	EA
205-1784	RES FXD FILM 1.78 M	17864	RN65D1784F (MIL-R-10509/2)	2.	EA
205-1961	RES FXD FILM 1.96 K	79727	RN65D1961F (MIL-R-10509/2)	1.	EA

TRACOR STOCK NUMBER	DESCRIPTION	MFGR CODE	MANUFACTURER PART NUMBER	TOTAL QUANTITY	U/M
205-1963	RES FXD FILM 193 K	79727	RN65D1963F (MIL-R-10509/2)	1.	EA
205-2151	RES FXD FILM 2.15 K	79727	RN65D2151F (MIL-R-10509/2)	4.	EA
205-2370	RES FXD FILM 237 OHM	79727	RN65D2370F (MIL-R-10509/2)	10.	EA
205-2372	RES FXD FILM 23.7 K	79727	RN65D2372F (MIL-R-10509/2)	1.	EA
205-2619	RES FXD FILM 26.1 OHM	79727	RN65D26R1F (MIL-R-10509/2)	2.	EA
205-3161	RES FXD FILM 3.16 K	79727	RN65D3161F (MIL-R-10509/2)	2.	EA
205-3163	RES FXD FILM 316 K	79727	RN65D3163F (MIL-R-10509/2)	1.	EA
205-3830	RES FXD FILM 383 OHM	79727	RN65D3830F (MIL-R-10509/2)	2.	EA
205-4220	RES FXD FILM 422 OHM	79727	RN65D4220F (MIL-R-10509/2)	1.	EA
205-5111	RES FXD FILM 5.11 K	79727	RN65D5111F (MIL-R-10509/2)	1.	EA
205-5112	RES FXD FILM 51.1 K	79727	RN65D5112F (MIL-R-10509/2)	2.	EA
205-5621	RES FXD FILM 5.62 K	79727	RN65D5621F (MIL-R-10509/2)	2.	EA
205-5902	RES FXD FILM 59 K	79727	RN65D5902F (MIL-R-10509/2)	1.	EA
205-6190	RES FXD FILM 619 OHM	79727	RN65D6190F (MIL-R-10509/2)	1.	EA
205-6811	RES FXD FILM 6.81 K	79727	RN65D6811F (MIL-R-10509/2)	1.	EA
205-7321	RES FXD FILM 7.32 K	79727	RN65D7321F (MIL-R-10509/2)	1.	EA
205-7501	RES FXD FILM 7.50 K	79727	RN65D7501F (MIL-R-10509/2)	2.	EA
205-8062	RES FXD FILM 80.6 K	79727	RN65D8062F (MIL-R-10509/2)	2.	EA
205-8250	RES FXD FILM 825 OHM	79727	RN65D8250F (MIL-R-10509/2)	3.	EA
205-8251	RES FXD FILM 8.25 K	79727	RN65D8251F (MIL-R-10509/2)	3.	EA
205-8252	RES FXD FILM 82.5 K	79727	RN65D8252F (MIL-R-10509/2)	1.	EA
205-9090	RES FXD FILM 909 OHM	79727	RN65D9090F (MIL-R-10509/2)	10.	EA
205-9093	RES FXD FILM 909 K	79727	RN65D9093F (MIL-R-10509/2)	1.	EA
208-0100	RES FXD COMP 10 OHM	01121	RC20GF100K (MIL-R-11/3)	1.	EA
208-0101	RES FXD COMP 100 OHM	01121	RC20GF101K (MIL-R-11/3)	4.	EA
208-0102	RES FXD COMP 1 K	01121	RC20GF102K (MIL-R-11/3)	5.	EA
208-0103	RES FXD COMP 10 K	01121	RC20GF103K (MIL-R-11/3)	3.	EA
208-0120	RES FXD COMP 12 OHM	35009	RC20GF120K (MIL-R-11/3)	1.	EA
208-0151	RES FXD COMP 150 OHM	01121	RC20GF151K (MIL-R-11/3)	1.	EA
208-0152	RES FXD COMP 1.5 K	01121	RC20GF152K (MIL-R-11/3)	3.	EA
208-0222	RES FXD COMP 2.2 K	01121	RC20GF222K (MIL-R-11/3)	2.	EA
208-0224	RES FXD COMP 220 K	01121	RC20GF224K (MIL-R-11/3)	1.	EA
208-0271	RES FXD COMP 270 OHM	01121	RC20GF271K (MIL-R-11/3)	3.	EA
208-0331	RES FXD COMP 330 OHM	01121	RC20GF331K (MIL-R-11/3)	3.	EA
208-0332	RES FXD COMP 3.3 K	01121	RC20GF332K (MIL-R-11/3)	6.	EA
208-0393	RES FXD COMP 39 K	01121	RC20GF393K (MIL-R-11/3)	1.	EA
208-0471	RES FXD COMP 470 OHM	01121	RC20GF471K (MIL-R-11/3)	2.	EA
208-0473	RES FXD COMP 47 K	01121	RC20GF473K (MIL-R-11/3)	2.	EA
208-0560	RES FXD COMP 56 OHM	01121	RC20GF560K (MIL-R-11/3)	3.	EA
208-0562	RES FXD COMP 5.6 K	01121	RC20GF562K (MIL-R-11/3)	3.	EA
208-0680	RES FXD COMP 68 OHM	01121	RC20GF680K (MIL-R-11/3)	4.	EA
208-0681	RES FXD COMP 680 OHM	01121	RC20GF681K (MIL-R-11/3)	1.	EA
208-0821	RES FXD COMP 820 OHM	01121	RC20GF821K (MIL-R-11/3)	2.	EA
208-0822	RES FXD COMP 8.2 K	01121	RC20GF822K (MIL-R-11/3)	1.	EA
209-0101	RES FXD COMP 100 OHM	44655	RC32GF101K (MIL-R-11/6)	1.	EA
210-0101	RES FXD COMP 100 OHM	01121	RC42GF101K (MIL-R-11/7)	1.	EA
211-1001	RES FXD FILM 1 K	17864	RN55D1001F (MIL-R-10509/7)	4.	EA
211-1002	RES FXD FILM 10 K	07115	RN55D1002F (MIL-R-10509/7)	1.	EA
211-1102	RES FXD FILM 11 K	07115	RN55D1102F (MIL-R-10509/7)	2.	EA
211-1103	RES FXD FILM 110 K	07115	RN55D1103F (MIL-R-10509/7)	2.	EA
211-1211	RES FXD FILM 1.21 K	17864	RN55D1211F (MIL-R-10509/7)	1.	EA
211-1212	RES FXD FILM 12.1 K	07115	RN55D1212F (MIL-R-10509/7)	1.	EA
211-1622	RES FXD FILM 16.2 K	07115	RN55D1622F (MIL-R-10509/7)	6.	EA
211-1783	RES FXD FILM 178 K	07115	RN55D1783F (MIL-R-10509/7)	1.	EA
211-2151	RES FXD FILM 2.15 K	07115	RN55D2151F (MIL-R-10509/7)	1.	EA
211-2152	RES FXD FILM 21.5 K	07115	RN55D2152F (MIL-R-10509/7)	1.	EA
211-2153	RES FXD FILM 215 K	07115	RN55D2153F (MIL-R-10509/7)	5.	EA
211-2371	RES FXD FILM 2.37 K	07115	RN55D2371F (MIL-R-10509/7)	2.	EA
211-2611	RES FXD FILM 2.61 K	07115	RN55D2611F (MIL-R-10509/7)	1.	EA
211-2612	RES FXD FILM 26.1 K	07115	RN55D2612F (MIL-R-10509/7)	2.	EA
211-2613	RES FXD FILM 261 K	07115	RN55D2613F (MIL-R-10509/7)	1.	EA
211-2873	RES FXD FILM 277 K	07115	RN55D2873F (MIL-R-10509/7)	1.	EA
211-3161	RES FXD FILM 3.16 K	07115	RN55D3161F (MIL-R-10509/7)	3.	EA
211-3481	RES FXD FILM 3.48 K	07115	RN55D3481F (MIL-R-10509/7)	13.	EA
211-3489	RES FXD FILM 34.8 OHM	17864	RN55D34R8F (MIL-R-10509/7)	2.	EA
211-4221	RES FXD FILM 4.22 K	07115	RN55D4221F (MIL-R-10509/7)	1.	EA
211-4642	RES FXD FILM 46.4 K	07115	RN55D4642F (MIL-R-10509/7)	1.	EA
211-5111	RES FXD FILM 5.11 K	07115	RN55D5111F (MIL-R-10509/7)	4.	EA
211-5112	RES FXD FILM 51.1 K	07115	RN55D5112F (MIL-R-10509/7)	2.	EA
211-5621	RES FXD FILM 5.62 K	07115	RN55D5621F (MIL-R-10509/7)	1.	EA
211-5622	RES FXD FILM 56.2 K	07115	RN55D5622F (MIL-R-10509/7)	1.	EA
211-7500	RES FXD FILM 750 OHM	07115	RN55D7500F (MIL-R-10509/7)	5.	EA
211-8250	RES FXD FILM 825 OHM	07115	RN55D8250F (MIL-R-10509/7)	6.	EA
211-8251	RES FXD FILM 8.25 K	07115	RN55D8251F (MIL-R-10509/7)	7.	EA
212-1001	RES FXD FILM 1 K	01295	RN60D1001F (MIL-R-10509/1)	6.	EA
212-1003	RES FXD FILM 100 K	01295	RN60D1003F (MIL-R-10509/1)	1.	EA
212-1101	RES FXD FILM 1.10 K	01295	RN60D1101F (MIL-R-10509/1)	2.	EA

TRACOR STOCK NUMBER	DESCRIPTION	MFGR CODE	MANUFACTURER PART NUMBER	TOTAL QUANTITY	U/M
212-1103	RES FXD FILM 110 K	91637	RN60D1103F (MIL-R-10509/1)	1.	EA
212-1212	RES FXD FILM 12.1 K	91637	RN60D1212F (MIL-R-10509/1)	2.	EA
212-1331	RES FXD FILM 1.33 K	91637	RN60D1331F (MIL-R-10509/1)	4.	EA
212-1471	RES FXD FILM 1.47 K	91637	RN60D1471F (MIL-R-10509/1)	3.	EA
212-1472	RES FXD FILM 14.7 K	01295	RN60D1472F (MIL-R-10509/1)	1.	EA
212-1961	RES FXD FILM 1.96 K	01295	RN60D1961F (MIL-R-10509/1)	2.	EA
212-2151	RES FXD FILM 2.15 K	01295	RN60D2151F (MIL-R-10509/1)	3.	EA
212-2152	RES FXD FILM 21.5 K	91637	RN60D2152F (MIL-R-10509/1)	1.	EA
212-2370	RES FXD FILM 237 OHM	91637	RN60D2370F (MIL-R-10509/1)	6.	EA
212-2371	RES FXD FILM 2X37 K	91637	RN60D2371F (MIL-R-10509/1)	2.	EA
212-2372	RES FXD FILM 23.7 K	96214	RN60D2372F (MIL-R-10509/1)	2.	EA
212-2611	RES FXD FILM 2.61 K	91637	RN60D2611F (MIL-R-10509/1)	2.	EA
212-2872	RES FXD FILM 28.7 K	01295	RN60D2872F (MIL-R-10509/1)	2.	EA
212-2873	RES FXD FILM 287 K	01121	RN60D2873F (MIL-R-10509/1)	2.	EA
212-3162	RES FXD FILM 31.6 K	91637	RN60D3162F (MIL-R-10509/1)	2.	EA
212-3480	RES FXD FILM 348 OHM	91637	RN60D3480F (MIL-R-10509/1)	2.	EA
212-3483	RES FXD FILM 348 K	91637	RN60D3483F (MIL-R-10509/1)	1.	EA
212-4220	RES FXD FILM 422 OHM	91637	RN60D4220F (MIL-R-10509/1)	2.	EA
212-4221	RES FXD FILM 4.22 K	01295	RN60D4221F (MIL-P-10509/1)	2.	EA
212-4640	RES FXD FILM 464 OHM	07115	RN60D4640F (MIL-R-10509/1)	1.	EA
212-5110	RES FXD FILM 511 OHM	91637	RN60D5110F (MIL-R-10509/1)	2.	EA
212-5111	RES FXD FILM 5.11 K	91637	RN60D5111F (MIL-R-10509/1)	5.	EA
212-5112	RES FXD FILM 51.1 K	01295	RN60D5112F (MIL-R-10509/1)	1.	EA
212-5621	RES FXD FILM 5.62 K	91637	RN60D5621F (MIL-R-10509/1)	2.	EA
212-6192	RES FXD FILM 61.9 K	91637	RN60D6192F (MIL-R-10509/1)	2.	EA
212-6810	RES FXD FILM 681 OHM	01295	RN60D6810F (MIL-R-10509/1)	1.	EA
212-6812	RES FXD FILM 68.1 K	91637	RN60D6812F (MIL-R-10509/1)	1.	EA
212-7500	RES FXD FILM 750 OHM	01295	RN60D7500F (MIL-R-10509/1)	2.	EA
212-8251	RES FXD FILM 8.25 K	91637	RN60D8251F (MIL-R-10509/1)	2.	EA
212-9090	RES FXD FILM 909 OHM	01295	RN60D9090F (MIL-R-10509/1)	4.	EA
212-9091	RES FXD FILM 9.09 K	01121	RN60D9091F (MIL-R-10509/1)	2.	EA
214-9101	RES FXD WW 1 OHM	12697	RW59V1R0 (MIL-R-26)	1.	EA
214-9301	RES FXD WW 3 OHM	12697	RW59V3R0 (MIL-R-26)	1.	EA
218-0024	SCR FLT HD 4-40X3/8	73734	2133	1.	EA
220-0024	SCR FLT HD 6-32X3/8	73734	2143	16.	EA
223-0032	SCR FLT HD 10-32X1/2	73734	2185	4.	EA
242-0020	SCR FIL HD 6-32X5/16	73734	2243	1.	EA
242-0024	SCR FIL HD 6-32X3/8	73734	2244	4.	EA
365-0024	SCR HEX HD 4-40X3/8	73734	5302	6.	EA
365-0032	SCR HEX HD 4-40X1/2	73734	5303	2.	EA
399-0016	SCR BUT HD 4-40X1/4	73734	4-40X1/4 HT TR STL NI PL	4.	EA
399-0024	SCR BUT HD 4-40X3/8	7/734	4-40X3-8 HT TR STL NI PL	5.	EA
561-0024	SCR BUT HD 6-32X3/8	73734	6-32X3/8 HT TR STL NI PL	6.	EA
610-0742	TERMINAL	71279	1010-3	70.	EA
611-0053	FERRULE NI PL	71279	1952-1	8.	EA
612-0003	HANDLE	71279	1221-1	4.	EA
612-0017	HANDLE	71279	2111-2-1	2.	EA
617-0248	WASHER FLAT NO 2	73734	1400 STL CAD PL	4.	EA
617-0256	WASHER FLAT NO 4	73734	1402 STL CAD PL	24.	EA
617-0267	WASHER FLAT NO 6	73734	1404 STL CAD PL	29.	EA
617-0270	WASHER FLAT NO 8	86928	5702-76-047 STL CAD PL	1.	EA
620-0121	WASHER LOCK INT NO 2	73734	1300	4.	EA
620-0123	WASHER LOCK INT NO 4	73734	1302	147.	EA
620-0125	WASHER LOCK INT NO 6	73734	1304	153.	EA
620-0126	WASHER LOCK INT NO 8	73734	1305	5.	EA
639-0006	WASHER NYLON NO 4	73734	103200	6.	EA
639-0010	WASHER NYLON NO 6	73734	103201	4.	EA
647-0010	NUT SERRATED 15/32-32	73734	76330-NP	1.	EA
649-0034	NUT HEX 2-56X3/16 AF	73734	8000 STL CAD PL	4.	EA
649-0074	NUT HEX 4-40X1/4 AF	73734	8003 STL CAD PL	35.	EA
649-0114	NUT HEX 6-32X5/16 AF	73734	8005 STL CAD PL	43.	EA
649-0134	NUT HEX 8-32X5/16 AF	73734	8008 STL CAD PL	5.	EA
651-0005	NUT HEX 4-40X3/16 AF	73734	8002A STL CAD PL	4.	EA
651-0017	NUT HEX 6-32X1/4 AF	73734	8005 STL CAD PL	4.	EA
653-0019	WASHER FLAT 15/32	73734	1499 NP STL	1.	EA
703-0010	WIRE 18AWG BLK STRD	70903	8501-BLK (MIL-W-16878)	87.	IN
703-0110	WIRE 18AWG BRN STRD	70903	8501-BRN (MIL-W-16878)	36.	IN
703-0210	WIRE 18AWG RED STRD	70903	8501-RED (MIL-W-16878)	151.	IN
703-0310	WIRE 18AWG ORN STRD	70903	8501-ORN (MIL-W-16878)	155.	IN
703-0410	WIRE 18AWG YEL STRD	70903	8501-YEL (MIL-W-16878)	86.	IN
703-0510	WIRE 18AWG GRN STRD	70903	8501-GRN (MIL-W-16828)	29.	IN
703-0610	WIRE 18AWG BLU STRD	70903	8501-BLU (MIL-W-16828)	35.	IN
703-0710	WIRE 18AWG VIO STRD	70903	8501-VIO (MIL-W-16828)	10.	IN
703-0810	WIRE 18AWG GRY STRD	70903	8501-GRY (MIL-W-16878)	48.	IN
703-0900	WIRE 18AWG WHT/BLK	70903	8501-WHT/BLK (MIL-W-16878)	18.	IN
703-0905	WIRE 18AWG WHT/GRN	70903	8501-WHT/GRN (MIL-W-16878)	30.	IN
703-0908	WIRE 18AWG WHT/GRY	70903	8501-WHT/GRY (MIL-W-16878)	30.	IN

TRACOR STOCK NUMBER	DESCRIPTION	MFGR CODE	MANUFACTURER PART NUMBER	TOTAL QUANTITY	U/M
703-0910	WIRE 18AWG WHT STRD	70903	8501-WHT (MIL-W-16878)	55.	IN
705-0010	WIRE 22AWG BLK STRD	70903	8503 BLK (MIL-W-16878)	159.	IN
705-0110	WIRE 22AWG BRN STRD	70903	8503 BRN (MIL-W-16878)	130.	IN
705-0210	WIRE 22AWG RED STRD	70903	8503 RED (MIL-W-16878)	249.	IN
705-0310	WIRE 22AWG ORN STRD	70903	8503 ORN (MIL-W-16878)	95.	IN
705-0410	WIRE 22AWG YEL STRD	70903	8503 YEL (MIL-W-16878)	137.	IN
705-0510	WIRE 22AWG GRN STRD	70903	8503 GRN (MIL-W-16878)	124.	IN
705-0610	WIRE 22AWG BLU STRD	70903	8503 BLU (MIL-W-16878)	121.	IN
705-0710	WIRE 22AWG VIO STRD	70903	8503 VIO (MIL-W-16878)	121.	IN
705-0810	WIRE 22AWG GRY STRD	70903	8503 GRY (MIL-W-16878)	133.	IN
705-0900	WIRE 22AWG WHT/BLK	70903	8503 WHT/BLK (MIL-W-16878)	105.	IN
705-0901	WIRE 22AWG WHT/BRN	70903	8503 WHT/BRN (MIL-W-16878)	97.	IN
705-0902	WIRE 22AWG WHT/RED	70903	8503 WHT/RED (MIL-W-16878)	95.	IN
705-0903	WIRE 22AWG WHT/ORN	70903	8503 WHT/ORN (MIL-W-16878)	87.	IN
705-0904	WIRE 22AWG WHT/YEL	70903	8503 WHT/YEL (MIL-W-16878)	90.	IN
705-0905	WIRE 22AWG WHT/GRN	70903	8503 WHT/GRN (MIL-W-16878)	149.	IN
705-0906	WIRE 22AWG WHT/BLU	70903	8503 WHT/BLU (MIL-W-16848)	108.	IN
705-0907	WIRE 22AWG WHT/VIO	70903	8503-WHT/VIO (MIL-W-16878)	100.	IN
705-0908	WIRE 22AWG WHT/GRY	70903	8503-WHT/GRY (MIL-W-16878)	147.	IN
705-0910	WIRE 22AWG WHT STRD	70903	8503-WHT (MIL-W-16878)	114.	IN
706-0010	WIRE 26AWG BLK STRD	70903	8505-BLK (MIL-W-16878)	148.	IN
706-0110	WIRE 26AWG BRN STRD	70903	8505-BRN (MIL-W-16878)	153.	IN
706-0210	WIRE 26AWG RED STRD	70903	8505-RED (MIL-W-16878)	177.	IN
706-0310	WIRE 26AWG ORN STRD	70903	8505-ORN (MIL-W-16878)	59.	IN
706-0410	WIRE 26AWG YEL STRD	70903	8505-YEL (MIL-W-16878)	140.	IN
706-0510	WIRE 26AWG GRN STRD	70903	8505-GRN (MIL-W-16878)	129.	IN
706-0610	WIRE 26AWG BLU STRD	70903	8505-BLU (MIL-W-16878)	36.	IN
706-0710	WIRE 26AWG VIO STRD	70903	8505-VIO (MIL-W-16878)	41.	IN
706-0810	WIRE 26AWG GRY STRD	70903	8505-GRY (MIL-W-16878)	64.	IN
706-0900	WIRE 26AWG WHT/BLK	70903	8505-WHT/BLK (MIL-W-16878)	REF	IN
706-0901	WIRE 26AWG WHT/BRN	70903	8505-WHT/BRN (MIL-W-16878)	27.	IN
706-0902	WIRE 26AWG WHT/RED	70903	8505-WHT/RED (MIL-W-16878)	111.	IN
706-0903	WIRE 26AWG WHT/ORN	70903	8505-WHT/ORN (MIL-W-16878)	22.	IN
706-0904	WIRE 26AWG WHT/YEL	70903	8505-WHT/YEL (MIL-W-16878)	14.	IN
706-0905	WIRE 26AWG WHT/GRN	70903	8505-WHT/GRN (MIL-W-16878)	13.	IN
706-0906	WIRE 26AWG WHT/BLU	70903	8505-WHT/BLU (MIL-W-16878)	13.	IN
706-0907	WIRE 26AWG WHT/VIO	70903	8505-WHT/VIO (MIL-W-16878)	13.	IN
706-0908	WIRE 26AWG WHT/GRY	70903	8505-WHT/GRY (MIL-W-16878)	13.	IN
706-0910	WIRE 26AWG WHT STRD	70903	8505-WHT (MIL-W-16878)	72.	IN
739-0001	RES FXD WW 4.220 K	07088	TYPE 460P SPL TEMP COEF	8.	EA
739-0002	RES FXD WW 6.131 K	07088	TYPE 460P SPL TEMP COEF	2.	EA
739-0003	RES FXD WW 7.944 K	07088	TYPE 460P SPL TEMP COEF	2.	EA
739-0004	RES FXD WW 10.0 K	07088	TYPE 460P SPL TEMP COEF	3.	EA
739-0005	RES FXD WW 12.48 K	07088	TYPE 460P SPL TEMP COEF	2.	EA
739-0006	RES FXD WW 21.60 K	07088	TYPE 460P SPL TEMP COEF	2.	EA
739-0007	RES FXD WW 27.57 K	07088	TYPE 460P SPL TEMP COEF	2.	EA
741-0001	RES FXD WW 1.58 K	07088	TYPE EP00 SPL TEMP COEF	4.	EA
741-0002	RES FXD WW 3.16 K	07088	TYPE EP00 SPL TEMP COEF	8.	EA
800-0914	DIODE 1N914	01295	1N914	90.	EA
800-4002	DIODE 1N4002	04713	1N4002	8.	EA
801-0096	DIODE 1N96A	73293	1N96A	7.	EA
801-0456	DIODE 1N456A	01295	1N456A	5.	EA
801-0746	DIODE 1N746A	01295	1N746A	1.	EA
801-0752	DIODE 1N752A	01295	1N752A	5.	EA
801-0753	DIODE 1N753A	01295	1N753A	5.	EA
900-0673	TSTR 2N673	01295	2N673	5.	EA
900-0697	TSTR 2N697	24446	2N697	2.	EA
900-0708	TSTR 2N708	01295	2N708	24.	EA
900-1038	TSTR 2N1038	01295	2N1038	1.	EA
900-1304	TSTR 2N1304	01295	2N1304	5.	EA
900-1305	TSTR 2N1305	01295	2N1305	25.	EA
900-1319	TSTR 2N1319	01295	2N1319	2.	EA
900-1539	TSTR 2N1539	01295	2N1539	1.	EA
900-1995	TSTR 2N1995	01295	2N1995	3.	EA
900-2102	TSTR 2N2102	01295	2N2102	2.	EA
900-2218	TSTR 2N2218	04713	2N2218	15.	EA
900-2270	TSTR 2N2270	01295	2N2270	21.	EA
900-3055	TSTR 2N3055	01295	2N3055	1.	EA
900-3134	TSTR 2N3134	01295	2N3134	13.	EA
900-3646	TSTR 2N3646	13715	2N3646	117.	EA
900-3702	TSTR 2N3702	01295	2N3702	37.	EA
900-3705	TSTR 2N3705	01295	2N3705	25.	EA
900-3707	TSTR 2N3707	01295	2N3707	2.	EA
900-3708	TSTR 2N3708	01295	2N3708	23.	EA
900-3819	TSTR 2N3819	01295	2N3819	1.	EA
900-3906	TSTR 2N3906	01295	2N3906	1.	EA
902-0711	TSTR 2N711B	01295	2N711B	10.	EA

TRACOR STOCK NUMBER	DESCRIPTION	MFGR CODE	MANUFACTURER PART NUMBER	TOTAL QUANTITY	U/M
3317-9332	CAP FXD MYL .33 MFD	04099	MMW33425	1.	EA
3317-9473	CAP FXD MYL .047 MFD	04099	MMW47325	2.	EA
3318-0028	CONN PLUG ELEC 22 PIN	02660	133-022-03	10.	EA
3318-5016	CONN RECP ELEC 22 PIN	02660	143-022-01	10.	EA
3318-5017	CONN RECP ELEC 22 PIN	02660	143-022-03	1.	EA
3319-0100	CAP FXD CER 10 PFD	71590	DD-100	4.	EA
3319-0102	CAP FXD CER 1000 PFD	71590	DD-102	2.	EA
3319-0151	CAP FXD CER 150 PFD	71590	DD-151	2.	EA
3319-0221	CAP FXD CER 220 PFD	71590	DD-221	5.	EA
3319-0331	CAP FXD CER 330 PFD	71590	DD-331	3.	EA
3319-0471	CAP FXD CER 470 PFD	71590	DD-471	1.	EA
3319-0472	CAP FXD CER 4700 PFD	71590	DD-4726	1.	EA
3319-0561	CAP FXD CER 560 PFD	71590	DD-561	1.	EA
3319-0680	CAP FXD CER 68 PFD	71590	DD-680	2.	EA
3319-0681	CAP FXD CER 680 PFD	71590	DD-681	10.	EA
3319-0821	CAP FXD CER 820 PFD	71590	DD-821	1.	EA
3321-9102	CAP FXD CER .1 MFD	71590	UK10-104	5.	EA
3324-9102	CAP FXD MYL .1 MFD	56289	192P10492	2.	EA
3324-9103	CAP FXD MYL .01 MFD	56289	192P10392	2.	EA
3324-9104	CAP FXD MYL .001 MFD	56289	192P10292	2.	EA
3324-9154	CAP FXD MYL .0015 MFD	56289	192P15292	2.	EA
3324-9223	CAP FXD MYL .022 MFD	56289	192P22392	1.	EA
3324-9224	CAP FXD MYL .0022 MFD	56289	192P22292	1.	EA
3324-9394	CAP FXD MYL .0039 MFD	56289	192P39292	1.	EA
3324-9473	CAP FXD MYL .047 MFD	56289	192P47392	1.	EA
3324-9475	CAP FXD MYL .00047MFD	56289	192P47192	2.	EA
3326-0032	RIVET POP 3/32X212	07707	AD32BS	38.	EA
3326-0042	RIVET POP 1/8X232	07707	AD42BS	24.	EA
3326-0043	RIVET POP 1/8X294	07707	AD43BS	6.	EA
3326-0044	RIVET POP 1/8X357	07707	AD44BS	12.	EA
3326-0045	RIVET POP 1/8X419	07707	AD45BS	7.	EA
3326-0046	RIVET POP 1/8X481	07707	AD46BS	52.	EA
3326-0132	RIVET POP 3/32X212	07707	AD32ABS	10.	EA
3326-1043	RIVET POP 1/8X294	07707	SD43BS	24.	EA
3331-0022	NUT CLINCH 4-40	46384	CL-440-1 STL CAD PL	45.	EA
3331-0032	NUT CLINCH 6-32	46384	CL-632-1 STL CAD PL	23.	EA
3331-0037	NUT CLINCH 6-32	46384	CL-632-2 STL CAD PL	12.	EA
3335-0101	CAP FXD ELEC 100 MFD	80183	TE-1059.5	2.	EA
3338-0251	CAP FXD ELEC 250 MFD	80183	TE-1138	3.	EA
3340-0100	CAP FXD ELEC 10 MFD	80183	TE-1204	1.	EA
3346-9201	FUSE 2A 125 VOLT	98997	8A62A-125V	6.	EA
3346-9501	FUSE 5A 125 VOLT	75915	361005	6.	EA
3388-0028	CABLE COAXIAL	70903	RG-58C/1 (MIL-C-17/28)	100.	FT
3388-0092	CABLE COAXIAL	70903	RG-178B/U (MIL-C-17/93)	9.	FT
3388-0116	CABLE COAXIAL	02660	RG-174/U (MIL-C-17/119)	REF	FT
3389-0011	TAPE LACING	70331	LC-134WH	REF	IN
3390	CONN BNC FEMALE	02660	UG-88E/U	2.	EA
3391-0001	CONN BNC MALE	02660	UG-657/U	7.	EA
3392-0011	CONN MALE 16 PIN	02660	26-4301-16P	1.	EA
3392-1006	CONN FEMALE 16 PIN	02660	26-4401-16S	1.	EA
3394-0004	CONN MALE 24 PIN	02660	26-4100-24P	7.	EA
3394-1004	CONN FEMALE 24 PIN	02660	26-4200-24S	7.	EA
3403-9103	CAP FXD CER .01 MFD	80183	TG-S10	5.	EA
3408-9502	CAP FXD PAPER .5 MFD	56289	CP53B1EF504K (MIL-C-25/4)	1.	EA
3422-0332	INDUCTOR 3300 UH	99800	2500-52	2.	EA
3422-0392	INDUCTOR 3900 UH	99800	2500-56	2.	EA
3426-0017	TUBING TEFLON NO 22	70331	TFT-200/22NAT	54.	IN
3426-0029	TUBING TEFLON NO 18	70331	TFT-200/18NAT	18.	IN
3426-0085	TUBING TEFLON NO 4	70331	TFT-200/4 NAT	6.	IN
3426-0097	TUBING TEFLON NO 1	70331	TFT-200/1 NAT	2.500	IN
3428-0002	MTG KIT PWR TSTR	04713	MK-15	2.	EA
3429	MTG KIT TSTR/DIODE	08289	PK-22-14-M	4.	EA
3431-0003	TSTR NON-JEDEC	09214	12A8	1.	EA
3440-2200	HOLDER LAMP RED	72765	51-304/RED	2.	EA
3440-2500	HOLDER LAMP GREEN	72765	51-304/GREEN	1.	EA
3440-2900	HOLDER LAMP WHITE	72765	51-304/WHITE	1.	EA
3446-0007	WIRE BRAID OVAL TYPE	70331	2142	6.	IN
3448-0005	JACK PHONE OPEN CKT	82389	12-A	1.	EA
3455-0772	CLAMP CABLE 3/16	83330	772	8.	EA
3455-0773	CLAMP CABLE 1/4	83330	773	4.	EA
3458-0001	KNOB	94144	50-2-1G OR (MS91528-0D1B)	1.	EA
3458-0094	KNOB	94144	70-5-2G OR (MS91528-1K2B)	1.	EA
3458-0165	KNOB	94144	50-3-1G OR (MS91528-0F1B)	1.	EA
3459-0003	CONN PLUG POWER	02660	160-3	1.	EA
3467-0016	CABLE POWER	70331	636	1.	EA
3468-1103	RELAY 24VDC	77342	KHP17D11-24VDC	1.	EA
3469-0001	SOCKET RELAY	77342	27E006	1.	EA

TRACOR STOCK NUMBER	DESCRIPTION	MFGR CODE	MANUFACTURER PART NUMBER	TOTAL QUANTITY	U/M
3475-0001	SCR CAPTIVE 6-32	88245	3200-6-12	10.	EA
3481-0014	CAP FXD ELEC 1000 MFD	80183	TVL-1338	2.	EA
3482-0001	CAP FXD ELEC 1K/1K	80183	TVL-2160	2.	EA
3486-0001	LUG TERMINAL NO 4	73734	118020	3.	EA
3486-0005	LUG TERMINAL NO 6	73734	1904	1.	EA
3486-0009	LUG TERMINAL NO 8	73734	1905	4.	EA
3486-0027	LUG TERMINAL 3/8	73734	118100	1.	EA
3487-9372	FUSE 3/8 A 250 V	71400	F02B-250V-3/8A (MIL-F-15160)	7.	EA
3488-0002	HOLDER FUSE	71400	HKP-H	2.	EA
3489-0002	HOLDER FUSE	71400	HJM-H	2.	EA
3490-0002	SWITCH TOGGLE DPST	72653	34-182	2.	EA
3490-0003	SWITCH TOGGLE DPDT	72653	34-192	2.	EA
3496-0004	HEADSET	81812	104-9-06	1.	EA
3497-0001	HEADSET CUSHION	81812	654	1.	EA
3507-0502	RES VAR COMP 5 K	44655	RV4NAYSD502A (MIL-R-94/5)	1.	EA
3522-0502	RES VAR COMP 5 K	01121	RV4LAYSA502A (MIL-R-94/5)	3.	EA
3559-0002	ADAPTER GROUND	82879	210	1.	EA
3561-0301	RESIN EPOXY POTTING	98991	C-7	.500	GM
3568-0100	INDUCTOR 10 UH	99800	1537-36	1.	EA
3568-0101	INDUCTOR 100 UH	99800	1537-76	2.	EA
3568-0120	INDUCTOR 12 UH	99800	1537-38	1.	EA
3568-0150	INDUCTOR 15 UH	99800	1537-40	2.	EA
3568-0270	INDUCTOR 27 UH	99800	1537-48	9.	EA
3568-9391	INDUCTOR 3X9 UH	99800	1537-26	1.	EA
3568-9471	INDUCTOR 4.7UH	99800	1537-28	1.	EA
3571-0753	STRAP TIE DOWN	98159	2829-75-3	1.	EA
3573-0001	SWITCH PUSHBUTTON NO	81073	30-1	2.	EA
3575-0102	RES VAR WW 1 K	80294	271-1-102	1.	EA
3578-0102	RES VAR WW 1 K	80294	273-1-102M	1.	EA
3580-0500	RES VAR WW 50 OHM	80294	200L-1-500	1.	EA
3583-0103	RES VAR WW 10 K	80294	200S-1-103M	1.	EA
3596-0101	RES VAR WW 100 OHM	80294	3067P-1-101	1.	EA
3596-0202	RES VAR WW 2 K	80294	3067P-1-202	1.	EA
3596-0502	RES VAR WW 5 K	80294	3067P-1-502	1.	EA
3608-0102	RES VAR COMP 1 K	44655	RV6NAYSD102A (MIL-R-94/3)	2.	EA
3611-9101	CAP FXD MYLR 1 MFD	09134	31-105C	1.	EA
3611-9102	CAP FXD MYLR .1 MFD	09134	31-104C	3.	EA
3611-9103	CAP FXD MYLR .01 MFD	09134	31-103C	1.	EA
3611-9473	CAP FXD MYLR .047 MFD	09134	31-473C	1.	EA
3611-9682	CAP FXD MYLR .68 MFD	09134	31-684C	1.	EA
3612-9102	CAP FXD MYLR .1 MFD	09134	25-104C	3.	EA
3624-0001	LUG SOLDER NO 4	73734	38-100	3.	EA
3628-0010	CONNECTOR PCB 10 PIN	71785	50-10A-20	3.	EA
3628-0015	CONNECTOR PCB 15 PIN	71785	50-15A-20 SERIES 250	1.	EA
3628-0022	CONNECTOR PCB 22 PIN	71785	50-22A-20	1.	EA
3630-0001	CRYSTAL 1000 KC	00815	NE 6A 1000 KC	1.	EA
3630-0002	CRYSTAL 10000 KC	00815	NE 6A 10000KC	1.	EA
3631-0001	HOLDER CRYSTAL	91506	8000-DG1	2.	EA
3632-0011	CAP VAR .8-30 PFD	73899	VC436WY	2.	EA
3633-0001	SWITCH SLIDE	82389	46256LF	1.	EA
3639-2002	SWITCH ROTARY 2 POLE	71590	PA-2002	1.	EA
3641-0002	SWITCH SLIDE DPDT	72653	34-162	1.	EA
3642-0016	SWITCH LEVER 4PDT	82389	130312	1.	EA
3645-0003	TRANSFORMER TSTR PWR	80223	DO-T3	1.	EA
3646	SHIELD	80223	DO-TSH	1.	EA
3648-0008	CONN SOC ELEC	71785	S-306AB	1.	EA
3649-0004	SPEAKER TSTR RADIO	74199	27A06212	1.	EA
3653-9151	INDUCTOR	72259	VIV-1.5	1.	EA
3655-1001	CAP FXD POLY .001 MFD	84171	PE102F	13.	EA
3655-5001	CAP FXD POLY .005 MFD	84171	PE502F	2.	EA
3656-1003	CAP FXD POLY .1 MFD	84171	1PJ-104F	4.	EA
3656-5002	CAP FXD POLY .050 MFD	84171	1PJ-503F	8.	EA
3657-0001	PAD MTG TSTR	07047	10171-N	65.	EA
3657-0011	PAD MTG TSTR	13103	7717-2N	19.	EA
3657-0013	PAD MTG TSTR	07047	10030-DAP	1.	EA
3803-0024	PLUG SNAP 3/8 HOLE	72653	1711	3.	EA
3805-0011	BOLT SPADE 6-32	73734	5467	8.	EA
3805-0041	BOLT SPADE 6-32	73734	5469	2.	EA
3806-0001	ADHESIVE	98911	TYPE A-6	1.	GM
3806-0020	ADHESIVE ACTIVATOR	98911	TYPE A	1.	GM
3807-0001	RUBBER STRIP SPONGE	77969	SPONGE RUBBER 5/32X3/8	19.	IN
3817-2003	CONN MS3102A-14S-1P	02660	MS3102A-14S-1P	1.	EA
3819-0309	CONN MS3106A-14S-1S	02660	MS3106A-14S-1S	1.	EA
3823-0003	CLAMP CABLE W/BUSHING	02660	MS3057-6A	1.	EA
3838-0101	RES VAR WW 100 OHM	73138	62PR100	2.	EA
3838-0102	RES VAR 1 K	73138	62P R1K	2.	EA
3838-0103	RES VAR 10 K	73138	62P R10K	1.	EA

TRACOR STOCK NUMBER	DESCRIPTION	MFGR CODE	MANUFACTURER PART NUMBER	TOTAL QUANTITY	U/M
3838-0201	RES VAR 200 OHM	73138	62P R200	3.	EA
3877-0020	TERMINAL SOLDER	88245	1481A	4.	EA
3878-0001	HEATSINK FOR TO-5	13103	2205 B	1.	EA
3897-0001	LAMP PLUG-IN	03797	CF03-RCS-1869	1.	EA
3897-0006	LAMP PLUG-IN	03797	CF03-RCS-2180	1.	EA
3898-0001	CLIP LAMP MTG	03797	10905-01 CAD PLATED	2.	EA
3899-0002	SOCKET LAMP MTG	03797	2K SOCKET	2.	EA
3921-0121	CAP FXD TA 120 MFD	56289	1090127X0015F2	1.	EA
3923-0037	CAP VAR CER MINAT	72982	538-037-E2P0 94R	2.	EA
3924-0470	CAP FXD CER 47 PFD	00656	MC-70-B-470-AK	63.	EA
3925-0004	SHIELD BEAD	02114	K5 001 00/3B	71.	EA
3947-9153	CAP FXD PLAS .015 MFD	84171	TYPE HT 1% 100 VDC	1.	EA
4188-0104	RES VAR CERMET 100 K	73138	62PA R100K	1.	EA
4196-0001	CONN COAX RADIO FREQ	02660	M23329/3-01-03 (MIL-C-23329/3)	2.	EA
5047-0024	STANDOFF H 4-40X3/8	83330	2331	4.	EA
5057-0032	STANDOFF H 4-40X1/2	83330	2332	4.	EA
5067-0048	STANDOFF H 6-32X3/4	83330	2323	4.	EA
5067-0100	STANDOFF H 6-32X1	83330	2324	6.	EA
5586-0036	STANDOFF R 4-40X9/16	06540	8082-A-0440-1B	8.	EA
5586-0108	STANDOFF R 4-40X1 1/8	06540	8088-A-0440-1B	2.	EA
5586-0124	STANDOFF R 4-40X1 3/8	06540	8092-A-0440-1B	2.	EA
5586-0200	STANDOFF R 4-40X2	06540	8099-A-0440-1B	2.	EA
5606-0116	STANDOFF R 6-32X1 1/4	06540	8165-A-0632-1B	1.	EA
6152	PLATE IDENT	19397	6152	3.	EA
6734	SWITCH THUNSWHEEL ASY	19397	6734	1.	EA
6742	SWITCH THUMBWHEEL	19397	6742	1.	EA
7173	TSTR ASSY 2N673 MOD	19397	7173	5.	EA
8145	CHANNEL BOTTOM	19397	8145	2.	EA
8819-0018	WIRE BUS BAR 18 AWG	70903	8019	51.	IN
8819-0022	WIRE BUS BAR 22 AWG	70903	8021	203.	IN
8914-0101	CAP FXD TA 100 MFD	01295	CS13BE107K (MIL-C-26655/2)	5.	EA
8914-0150	CAP FXD TA 15 MFD	01295	CS13BE156K (MIL-C-26655/2)	5.	EA
8916-0121	CAP FXD TA 120 MFD	05397	CS13BD127K (MIL-C-26655/2)	2.	EA
8916-9331	CAP FXD TA 3.3 MFD	05397	CS13BD335K (MIL-C-26655/2)	14.	EA
8917-0121	CAP FXD TA 120 MFD	01295	CS13BC127K (MIL-C-26655/2)	10.	EA
8917-0390	CAP FXD TA 39 MFD	05397	CS13BC396K (MIL-C-26655/2)	8.	EA
8917-9471	CAP FXD TA 4.7 MFD	05397	CS13BC475K (MIL-C-26655/2)	5.	EA
8918-0331	CAP FXD TA 330 MFD	05397	CS13BB337K (MIL-C-26655/2)	11.	EA
8918-0560	CAP FXD TA 56 MFD	05397	CS13BB566K (MIL-C-26655/2)	3.	EA
9008	TRANSFORMER POWER	19397	9008	1.	EA
9212	BOARD PC	19397	9212	1.	EA
9748	PCB ASSY RF PREAMP	19397	9748	1.	EA
21472-0003	INK MARKING	79436	CAT-L-INK 50-710	.200	GM
21485-9101	CAP FXD TA 1 MFD	05397	CS13BF105K (MIL-C-26655/2)	32.	EA
27511-0561	CAP FXD MICA 560 PFD	00853	CM20FD561GN3 (MIL-C-5/2)	2.	EA
27512-0121	CAP FXD MICA 120 PFD	00853	CM05F121G03 (MIL-C-5/18)	1.	EA
27512-0131	CAP FXD MICA 130 PFD	00853	CM05F131G03 (MIL-C-5/18)	1.	EA
27512-0151	CAP FXD MICA 150 PFD	00853	CM05F151G03 (MIL-C-5/18)	1.	EA
27512-0152	CAP FXD MICA 1500 PFD	00853	CM06F152G03 (MIL-C-5/18)	1.	EA
27512-0180	CAP FXD MICA 18 PFD	00853	CM05C180K03 (MIL-C-5/18)	2.	EA
27512-0181	CAP FXD MICA 180 PFD	00853	CM05F181G03 (MIL-C-5/18)	2.	EA
27512-0182	CAP FXD MICA 1800 PFD	00853	CM06F182G03 (MIL-C-5/18)	1.	EA
27512-0220	CAP FXD MICA 22 PFD	00853	CM05E220J03 (MIL-C-5/18)	5.	EA
27512-0221	CAP FXD MICA 220 PFD	00853	CM05F221G03 (MIL-C-5/18)	4.	EA
27512-0271	CAP FXD MICA 270 PFD	00853	CM05F271G03 (MIL-C-5/18)	10.	EA
27512-0392	CAP FXD MICA 3900 PFD	00853	CM06F392G03 (MIL-C-5/18)	1.	EA
27512-0680	CAP FXD MICA 68 PFD	00853	CM05E680G03 (MIL-C-5/18)	1.	EA
27512-0820	CAP FXD MICA 80 PFD	00853	CM05E820G03 (MIL-C-5/18)	1.	EA
27513-0102	CAP FXD MICA 1000 PFD	84171	DM-15-102G	2.	EA
27513-0122	CAP FXD MICA 1200 PFD	72136	DM-15-122G	1.	EA
27513-0471	CAP FXD MICA 470 PFD	84171	DM-15-471G	5.	EA
27513-0561	CAP FXD MICA 560 PFD	84171	DM-15-561G	2.	EA
27513-0681	CAP FXD MICA 680 PFD	84171	DM-15-681G	4.	EA
599016-0001	BAR CHASSIS	19397	599016-0001	1.	EA
599016-0002	BAR CHASSIS	19397	599016-0002	1.	EA
599016-0003	BAR CHASSIS	19397	599016-0003	1.	EA
599017-0006	RAIL GUIDE	19397	599017-0006	8.	EA
599019-0001	COVER BOTTOM	19397	599019-0001	1.	EA
599019-0002	COVER TOP	19397	599019-0002	1.	EA
599023	BRACKET CONN PANEL	19397	599023	2.	EA
599028	TOP RAIL	19397	599028	2.	EA
599029	BOTTOM RAIL	19397	599029	1.	EA
599033	BRACKET COMP MTG	19397	599033	1.	EA
599034	BRACKET COMP MTG	19397	599034	1.	EA
599038	COVER	19397	599038	2.	EA
599058	HEAT SINK	19397	599058	1.	EA
599059	COVER COMP	19397	599059	1.	EA

TRACOR STOCK NUMBER	DESCRIPTION	MFGR CODE	MANUFACTURER PART NUMBER	TOTAL QUANTITY	U/M
599060	BRACKET CAP MTG	19397	599060	1.	EA
599077	HEAT SINK	19397	599077	1.	EA
599079	GROUND BUS INT PANEL	19397	599079	1.	EA
599105	BRACKET CAP MTG	19397	599105	1.	EA
599106	STANDOFF	19397	599106	2.	EA
599109	CARRIER LEVEL METER	19397	599109	1.	EA
599168	ASSY ANTENNA CABLE	19397	599168	1.	EA
599180	XFMR DUAL BIFILAR	19397	599180	1.	EA
599195	BOARD PRINTED CKT	19397	599195	1.	EA
599209	COVER MODULE	19397	599209	1.	EA
599210	COVER ACCESS	19397	599210	1.	EA
599211	SHIELD CHASSIS BRACE	19397	599211	2.	EA
599213	SUPPORT CHASSIS	19397	599213	4.	EA
599217	BRACKET RECORDER INT	19397	599217	1.	EA
599246	BRACKET PCB CHASSIS	19397	599246	2.	EA
599247	CHASSIS BOTTOM	19397	599247	1.	EA
599248	BAR CORNER	19397	599248	2.	EA
599249	GUIDE PCB	19397	599249	20.	EA
599250	COVER ACCESS	19397	599250	1.	EA
599253-0110	SPACER	19397	599253-0110	4.	EA
599255	BRACKET PANEL SPACER	19397	599255	1.	EA
599256	SPACER FRONT	19397	599256	1.	EA
599257	COVER	19397	599257	1.	EA
599266	EXTDR 22 PIN PCB ASSY	19397	599266	1.	EA
599267	CONNECTOR ASSY	19397	599267	1.	EA
599268	CHASSIS BOTTOM	19397	599268	1.	EA
599272	CHASSIS SUB FRONT	19397	599272	1.	EA
599273-0735	SPACER THREADED	19397	599273-0735	2.	EA
599274	BAR PCB CHASSIS	19397	599274	2.	EA
599283	CABLE 24 PIN ASSY	19397	599283	2.	EA
599284	SPACER ACTUATOR	19397	599284	1.	EA
599312	BUSS GROUND EXTERNAL	19397	599312	1.	EA
599314	INSULATOR ANT INPUT	19397	599314	1.	EA
599322-0001	BRACKET END LEFT	19397	599322-0001	1.	EA
599354	BOARD PRINTED CKT	19397	599354	1.	EA
599355	BOARD PRINTED CKT	19397	599355	1.	EA
599357	TSTR MATCHED	19397	599357	1.	EA
599359	PANEL FRONT	19397	599359	1.	EA
599360	BOARD PRINT CKT	19397	599360	1.	EA
599361	PIN GUIDE RECT	19397	599361	5.	EA
599363	PANEL REAR	19397	599363	1.	EA
599368-0001	BRACKET END RIGHT	19397	599368-0001	1.	EA
599378	ASSY CHAS 599H VLF	19397	599378	1.	EA
599384	ASSY WIRING HARNESS	19397	599384	1.	EA
599391	TSTR MATCHED	19397	599391	1.	EA
599394-0002	599-402 PH SERVO MOD	19397	599394-0002	1.	EA
599397	SHELL PROTECTIVE	19397	599397	1.	EA
599403	COUNTER MAGNETIC	19397	599403	1.	EA
599483	PHASE ERROR METER	19397	599483	1.	EA
599569	ASSY PCB LO LIM/FILT	19397	599569	1.	EA
599570-0002	PCB ASSY PHASE SHIFT	19397	599570-0002	1.	EA
599657	PANEL FRONT	19397	599657	1.	EA
599658	CHASSIS REC/SYN/REC	19397	599658	1.	EA
599704	CLAMP SPEAKER	19397	599704	1.	EA
599720	BOARD PRINTED CKT	19397	599720	1.	EA
599721	PCB ASSY	19397	599721	1.	EA
599722	HARNESS WIRING ASSY	19397	599722	1.	EA
599723	599-502 PWR SUP MOD	19397	599723	1.	EA
599724	PANEL REAR	19397	599724	1.	EA
599725	PANEL PAINTED FRONT	19397	599725	1.	EA
599735	PCB ASSY REF DIVIDER	19397	599735	1.	EA
599736	PCB ASSY PH DET/VCO	19397	599736	1.	EA
599737	PCB ASSY 1ST DECADE	19397	599737	1.	EA
599738	PCB ASSY 2-3 DECADE	19397	599738	1.	EA
599740	PANEL REAR	19397	599740	1.	EA
599742	PANEL REAR BLACK	19397	599742	1.	EA
599746	PCB ASSY LF AMPLIFIER	19397	599746	1.	EA
599747	PCB ASSY SEQ/DUAL MOD	19397	599747	1.	EA
599749-0002	599-204 SYN/RCVR MOD	19397	599749-0002	1.	EA
599751	HARNESS WIRING ASSY	19397	599751	1.	EA
599761	599-303 AGC PHASE MOD	19397	599761	1.	EA
599768	CONN PANEL ASSY	19397	599768	1.	EA
599772	ACCESSORY PARTS ASSY	19397	599772	1.	EA
599774	PANEL CONN INTERNAL	19397	599774	1.	EA
599776	HARNESS ASSY 599 007	19397	599776	1.	EA
599779	BOARD PC	19397	599779	1.	EA
599781	BOARD PC	19397	599781	1.	EA

LIST OF REPLACEABLE PARTS DATE 12/11/67

TRACOR STOCK NUMBER	DESCRIPTION	MFGR CODE	MANUFACTURER PART NUMBER	TOTAL QUANTITY	U/M
599784	BOARD PC	19397	599784	1.	EA
599786	BOARD CONN BARRIER	19397	599786	1.	EA
599788	BOARD PRINTED CKT	19397	599788	1.	EA
599797	HARNESS WIRING ASSY	19397	599797	1.	EA
599799	TERMINAL BOARD	19397	599799	1.	EA
599801	COVER	19397	599801	1.	EA
599812	BOARD PC	19397	599812	1.	EA
599814	SHIELD RF PREAMP	19397	599814	1.	EA
599815	SHIELD VCO	19397	599815	1.	EA
599816	BOARD PC	19397	599816	1.	EA
599817	BOARD PC	19397	599817	1.	EA
599824	PANEL FRONT	19397	599824	1.	EA
599826	SHIELD INSULATOR	19397	599826	1.	EA
599829	ASSY PCB	19397	599829	1.	EA
599831	BOARD TERMINAL	19397	599831	1.	EA
599848	MANUAL OPS 599J RCVR	19397	599848	2.	EA
599849	PCB ASSY AGC JUMPER	19397	599849	1.	EA
599850	PANEL CONN EXTERNAL	19397	599850	1.	EA

NUMERIC LIST OF MANUFACTURER CODES

CODE NO.	MANUFACTURER	ADDRESS
T0002	LANSDALE TRANSISTOR CORP	LANSDALE PA
T0003	PAMOTOR INC	SAN FRANCISCO CALIF
T0004	PATEK PHILIPPE	GENEVA, SWITZERLAND
T0005	RUSSELL INDUSTRIES INC	LYNBROOK, L. I., N. Y.
T0006	TRINITY CAPACITOR CO	TRINITY, TEXAS
T0007	SIEMENS AMERICA INC	WHITE PLAINS, N. Y.
T0008	SOUTHWEST ELECTRONICS INC	HOUSTON TEX
T0009	MOLECU-WIRE CORP.	SCOBEYVILLE, ILL
T0010	PACTRA CHEMICAL CO INC	LOS ANGELES CALIFORNIA
T0011	EPCO	FLINT, MICH
T0012	DABURN ELECTRONICS AND CABLE CORPORATION	NEW YORK N Y
T0013	GRAYSON-STADLER	WEST CONCORD MASS
T0014	PEERLESS IMPERIAL CO	NEWARK N J
T0015	GENERAL PACKAGING CORP	DALLAS TEX
T0017	I SQUARE R ELEMENT CO	TONAWANDA N Y
T0020	VICTOR WIRE AND CABLE CO	LOS ANGELES CALIF
T0021	UNIFORM TUBES INC	COLLEGEVILLE P A
T0022	LONE STAR PAPER CO	AUSTIN TEX
T0023	NATIONWIDE PAPERS	AUSTIN, TEX
T0024	RADIOEAR CORP.	CANONSBURG PENN
T0025	RING CHEMICAL CO	HOUSTON TEXAS
T0026	TACONIC PLASTICS	PETERSBURG N Y
T0027	ORGANIC PRODUCTS CO	IRVING TEX
T0028	AVCO CORP	WILMINGTON MASS
T0029	APPLIED RESEARCH ASSOC	AUSTIN TEX
T0030	SENNHEISER ELECTRONIC CORP	NEW YORK N Y
T0031	PRECISION SAMPLING CORP	BATON ROUGE LA
T0032	KURTZ INC	HOUSTON TEX
T0034	HOUSTON OMNIGRAPHIC CORP	HOUSTON TEX
T0037	MULTICORE SALES CORP	WESTBURY NY
T0038	DELTA-CHICAGO, INC.	FRANKLIN PARK ILL
00141	PIC DESIGN CORP	EAST ROCKAWAY N Y
00276	CONSOLIDATED AVIONICS DIV.OF CONDEC CORP.	WESTBURY N Y
00328	STERLING INST DIV OF DESIGNATRONICS INC	MINEOLA LONG ISLAND N Y
00348	MICROTRAN CO INC	VALLEY STREAM N Y
00544	METAL CAL A DIVISION OF AVERY ADHESIVE PRODUCTS INC	INGLEWOOD CALIF
00656	AEROVOX CORP	NEW BEDFORD MASS
00779	AMP INC	HARRISBURG PA
00781	AIRCRAFT RADIO CORP	BOONTON N J
00815	NORTHERN ENGINEERING LABORATORIES INC	BURLINGTON WIS
00853	SANGAMO ELECTRIC CO PICKENS DIVISION	PICKENS S C
01009	ALDEN PRODUCTS CO	BROCKTON MASS
01121	ALLEN-BRADLEY CO	MILWAUKEE WIS
01139	GENERAL ELECTRIC SILICONE PRODUCTS DEPT	WATERFORD, NEW YORK
01170	BELLOFRAM CORP	BURLINGTON MASS
01281	TRW SEMICONDUCTORS INC	LAWNDALE CALIF
01295	TEXAS INSTRUMENTS INC SEMICONDUCTOR-COMPONENTS DIVISION	DALLAS TEX
01351	DYNAMIC GEAR CO INC	AMITYVILLE N Y
01364	ALLIED RADIO CORP	CHICAGO ILL
01490	REZOLIN INC	SANTA MONICA CALIF
01561	CHASSIS-TRAK CORP	INDIANAPOLIS IND
01766	INTERNATIONAL CRYSTAL	OKLAHOMA CITY OKLA
01807	PETERSEN RADIO CO INC	COUNCIL BLUFFS IOWA
02111	SPECTROL ELECTRONICS CORP	SAN GABRIEL CALIF 91778
02114	FERROXCUBE CORP OF AMERICA	SAUGERTIES N Y
02376	CONSOLIDATED AVIONICS CORP	WESTBURY N Y
02570	CRAWFORD FITTING CO(SWAGELOK)	SOLON OHIO
02640	TORWICO ELECTRONICS INC	LAKEWOOD N J
02660	AMPHENOL-BORG ELECTRONICS CORP	BROADVIEW CHICAGO ILL
02733	PENN AIRCRAFT PRODUCTS INC	DAYTON, OHIO
02735	RADIO CORP OF AMERICA COMML REC TUBE AND SEMICONDUCTOR DIV	SOMERVILLE N J
02768	FASTEX DIV OF ILLINOIS TOOL WORKS	DES PLAINES ILL
02770	BRISTOL MOTORS DIV OF VOCALINE CO OF AMERICA	OLD SAYBROOK, CONN
02777	HOPKINS ENGINEERING CO	SAN FERNANDO CALIF
02811	METALPHOTO CORP	CLEVELAND OHIO
02833	ANTENNA SPECIALISTS CO	CLEVELAND OHIO
02863	EMCOR DIV OF INGERSOLL PRODUCTS DIV OF BORG-WARNER CORP	ELGIN ILL
02875	HUDSON TOOL AND DIE CO INC	NEWARK N J
02918	MARKITE CORP	NEW YORK N Y
02929	NEWARK ELECTRONICS CORP	CHICAGO ILL
03007	H A GUDEN CO. INC.	LONG ISLAND NY
03038	LONG-LOK CORP	LOS ANGELES CAL
03171	ELECTRONIC PRODUCTION AND DEVELOPMENT INC	HAWTHORNE CALIF
03296	NYLON MOLDING CORP	SPRINGFIELD N J
03481	GOODRICH B F CO AEROSPACE AND DEFENSE PRODUCTS DIVISION	AKRON OHIO
03508	GECO-SEMICONDUCTOR PRODUCTS	SYRACUSE, N Y
03550	VANGUARD ELECTRONICS CO	INGLEWOOD CALIF

NUMERIC LIST OF MANUFACTURER CODES

CODE NO.	MANUFACTURER	ADDRESS
03743	APPELTON ELECTRIC	CHICAGO ILL
03756	APPLIED RESEARCH LABORATORIES	GLENDALE CALIF
03765	AUTOMATIC COIL CO	MINEOLA N Y
03797	ELDEMA CORP	COMPTON, CALIF
03877	TRANSITRON ELECTRONIC CORP	WAKEFIELD MASS
03878	SIGNAL MFGR COMPANY	LYNN MASS
03890	MARKEL,L FRANK AND SONS	NORRISTOWN,PA
03911	CLAIREX CORP	NEW YORK N Y
03945	WHITE INSTRUMENT LABORATORIES	AUSTIN TEX
03954	DIEHL MFG CO A SUBSIDIARY OF SINGER MFG CO	SOMERVILLE N J
03984	GENERAL ELECTRIC CO.SEMI-CONDUCTOR PROD DEPT	CLYDE N Y
04009	ARROW-HART AND HEGEMAN ELECTRIC CO	HARTFORD CONN
04099	CAPCO CAPACITORS	IRVING TEX
04264	CIRCON COMPONENT CORP	GOLETA CALIF 93017
04347	HYSOL CORP	OLEAN N Y
04426	LICON SWITCH & CONTROL	ELYRIA, OHIO
04552	EMERSON AND CUMING INC	CANTON MASS
04713	MOTOROLA INC SEMICONDUCTOR PRODUCTS DIVISION	PHOENIX ARIZONA
04773	AUTOMATIC ELECTRIC CO	NORTHLAKE ILL
04814	CHATHAM CONTROLS CORP	CHATHAM N J
05010	THERMISTOR DIVISION OF GULTON INDUSTRIES INC	METUCHEN N J
05236	JONATHAN MFG CO	FULLERTON CALIF
05245	COMPONENTS CORP	CHICAGO ILL
05276	POMONA ELECTRONICS CO INC	POMONA CALIF
05277	WESTINGHOUSE ELECTRIC CORP SEMI-CONDUCTOR DEPARTMENT	YOUNGWOOD PA
05301	ENGELHARD INDUSTRIES	NEWARK N J
05397	KEMET CO NOW UNION CARBIDE CORP LINDE DIV KEMET DEPT	
05397	UNION CARBIDE CORP LINDE DIVISION KEMET DEPT	CLEVELAND OHIO
05464	INDUSTRIAL ELECTRONIC ENGINEERS INC	VAN NUYS CALIF
05574	VIKING INDUSTRIES INC	CHATSWORTH CALIF
05614	ALTEC LANSING CORP	ANAHEIM CALIF
05820	WAKEFIELD ENGINEERING INC	WAKEFIELD MASS
05972	AMERICAN SEALANTS CO (LOCKTITE)	HARTFORD,CONN
05972	LOCKTITE (AMERICAN SEALANTS CO.)	HARTFORD CONN
06004	BASSICK CO THE	BRIDGEPORT CONN
06008	NEW DEPARTURE DIVISION OF GENERAL MOTORS CORP	MERIDEN CONN
06229	ELECTROVERT INC	MOUNT VERNON N Y
06317	BERMITE POWDER CO	SAUGUS CALIF
06341	PRODUCTS TECHNIQUES INC	DOWNEY CAL
06383	PANDUIT CORP.	TINLEY PARK ILL
06531	BECTON DICKINSON & CO	RUTHERFORD N J
06540	AMATOM ELECTRONIC HARDWARE CO INC	NEW ROCHELLE N Y
06542	FEDERAL STANDARDS	GENERAL SERVICES ADMINISTRATION
06555	BEEDE ELECTRICAL INSTRUMENT CO	PENACOOK NH 03303
06668	TEXAS INSTRUMENTS INC APPARATUS DIV	HOUSTON TEX
06682	MAGNETIC SHIELD DIVISION OF PERFECTION MICA CO	CHICAGO ILL
06751	SEMCOR DIVISION COMPONENTS INC	PHOENIX ARIZ
06915	RICHCO PLASTIC CO	CHICAGO ILL
07047	ROSS MILTON CO	HATBORO PA
07065	LINE ELECTRIC CO	ORANGE N J
07088	KELVIN ELECTRIC CO	VAN NUYS CAL
07115	CORNING GLASS WORKS ELECTRONIC COMPONENTS DEPARTMENT	RALEIGH N C
07126	DIGITRAN CO	PASADENA CALIF
07183	DECCO INC	DALLAS TEX
07261	AVNET CORP	CULVER CITY CALIF
07263	FAIRCHILD CAMERA AND INST CORP SEMICONDUCTOR DIV	MOUNTAIN VIEW CALIF
07633	EPOXY PRODUCTS INC	IRVINGTON N J
07707	UNITED SHOE MACHINERY CORP FASTENER DIVISION	SHELTON CONN
07776	MCDANEL REFRACTORY PROCELAIN CO	BEAVER FALLS PA
07812	HOPCO CHEMICAL CO	NORTH ARLINGTON N J
07829	BODINE ELECTRIC CO	CHICAGO ILL
07843	LEAR SIEGLER INC BOGEN COMMUNICATION DIV	PARAMUS N J
07886	NATIONAL RADIO CO INC	MELROSE MASS
07910	CONTINENTAL DEVICE CORP	HAWTHORNE CAL
07933	RAYTHEON MFG CO SEMICONDUCTOR DIVISION	MOUNTAIN VIEW CALIF
08018	BORG-WARNER CORP.	CHICAGO, ILL.
08242	THETA INSTRUMENT CORP	SADDLE BROOK N J
08257	NUCLEONICS PRODUCTS CO INC	LOS ANGELES CALIF
08261	SPECTRA-STRIP WIRE AND CABLE CORP	GARDEN GROVE CALIF
08289	BLINN DELBERT CO	POMONA CALIF
08726	UNIVERSAL TRANSFORMER CO INC	WYLIE TEX
08779	SIGNAL TRANSFORMER CO	BROOKLYN NY
08795	RAYCLAD TUBES INC	REDWOOD CITY CALIF
08800	GENERAL ELECTRIC CO INSULATING MATERIALS DEPT	SCHENECTADY N Y
08806	MINIATURE LAMP DEPARTMENT GECO	CLEVELAND OHIO
08928	ABBOTT SCREW AND MFG CO	CHICAGO ILL
08987	BROWN INSTRUMENTS DIV OF HONEYWELL INC	MINNEAPOLIS MINN

NUMERIC LIST OF MANUFACTURER CODES

CODE NO.	MANUFACTURER	ADDRESS
08987	HONEYWELL INC INDUSTRIAL PRODUCTS DIV	FORT WASHINGTON PA
08987	HONEYWELL INC PHILADELPHIA DIVISION	PHILADELPHIA PA
09040	PHELPS DODGE COPPER PRODUCTS CORP	FORT WAYNE IND
09134	TEXAS CAPACITOR CO	HOUSTON TEX
09145	ATOHM ELECTRONICS	SUN VALLEY CALIF
09214	GENERAL ELECTRIC CO SEMICONDUCTOR PRODUCTS DEPT	AUBURN N Y
09353	C AND K COMPONENTS INC	NEWTON MASS
09709	BULLDOG ELECTRIC PRODUCTS INC	DETROIT MICH
09797	PENNSYLVANIA FLUOROCARBON CO. INC.	CLIFTON HEIGHTS PA
09808	STOCKER HINGE MFG CO	BROOKFIELD, ILL 60513
09823	BURGESS BATTERY CO DIV SERVEL INC	FREEPORT ILL
09922	BURNDY CORP	NORWALK CONN
10108	HURST MFG CORP	PRINCETON,IND
10110	SCIENTIFIC-ATLANTA INC	ATLANTA GA
10257	CAHN A L AND SONS	NEW YORK N Y
11139	DEUTSCH CO ELECTRONIC COMPONENTS DIVISION	BANNING CALIF
11147	EPOXYLITE CORP	SOUTH EL MONTE, CALIF
11352	TRANSFORMER ELECTRONICS CO	BOULDER COLO
11649	CAJON CO	CHICAGO ILL
11700	J B ELECTRONICS	CHICAGO ILL
11783	NY GLASS INC	PARAMOUNT CALIF
11884	GENERAL MILLS,INC CHEMICAL DIV	KANKAKEE ILL
11907	CALFAX INC	REDONDO BEACH CALIF
12040	NATIONAL SEMICONDUCTOR CORP.	DANBURY,CONN
12060	DIODES INC	CANOGA PARK CALIF
12136	PHILADELPHIA HANDLE CO.	CAMDEN, N. J.
12360	ALBANY PRODUCTS CO INC	SOUTH NORWALK CONN
12405	HYSOL CORP	EL MONTE CALIF
12515	THERMATICS INC	ELM CITY N C
12599	FLUOROCARBON CO	ANAHEIM CALIF
12623	WHITEY RESEARCH TOOL CO.	EMERYVILLE CALIF
12697	CLAROSTAT MFG CO INC	DOVER N H
12744	INDEPENDENT INK CO	GARDENA CALIF
12760	OWEN-CORNING FIBERGLAS CORP	SANTA CLARA CALIF
12770	ARNOLD ENGINEERING CO PACIFIC DIVISION	FULLERTON CALIF
12954	DICKSON ELECTRONICS CORP	SCOTTSDALE ARIZ
12969	UNITRODE CORP	WATERTOWN MASS
13103	THERMALLOY CO	DALLAS TEX
13113	SHEPHERD CASTERS INC	BENTON HARBOR MICH
13148	VOGUE INSTRUMENT CORP	COLLEGE POINT N Y
13209	BENDIX CORP THE SEMICONDUCTOR DIVISION	HOLMDEL N J
13327	SOLITRON DEVICES INC	NORWOOD N J
13440	AMERICAN PACKING AND GASKET CO	HOUSTON TEX
13550	ATLAS CONNECTORS CO	EL MONTE CALIF
13715	FAIRCHILD CAMERA & INSTRUMENT CORP	SAN RAFAEL CALIF
13812	DIALCO ELECTRIC CORP	BROOKLYN NY
13850	TECHNIPOWER INC	SOUTH NORWALK, CONN.
13934	MIDWEC CORP	OSHKOSH NEBR
14099	SEMTECH CORP	NEWBURY PARK CALIF
14136	AIRWORK CORP	MIAMI FLA
14193	CALIFORNIA RESISTOR CORP	SANTA MONICA, CALIF
14195	ELECTRONIC CONTROLS INC	WILTON CONN
14433	ITT SEMICONDUCTORS	WEST PALM BEACH FLA
14655	CORNELL-DUBILIER ELECTRIC CORP	NEWARK N J
14735	FERROTRAN ELECTRONICS CO INC	NEW YORK N Y
14841	WARD LEONARD ELECTRIC CO	HAGERSTOWN MD
14869	RUSTRAK INSTRUMENT CO	MANCHESTER N H
14907	CRAMER DIV OF GIANNINI CONTROLS	OLD SAYBROOK, CONN.
14959	CRANE CO	CHICAGO ILL
15235	CROUSE-HINDS CO	SYRACUSE N Y
15481	CURTIN W H AND CO	HOUSTON, TEX
15584	RIEDON DIV OF ON-MARK ENGR CO	NORTH HOLLYWOOD CALIF
15605	CUTLER-HAMMER INC	MILWAUKEE WIS
15653	KAYLOCK DIVISION, KAYNAR MFG. CO.	FULLERTON, CALIF.
15801	FENWAL ELECTRONICS INC	FRAMINGHAM MASS
15849	USECO INC	MT VERNON N Y
15909	DAVEN DIVISION THOMAS A EDISON INDUSTRIES MCGRAW EDISON CO	LIVINGSTON N J
15957	TOR MFG CO	IRWINDALE CALIF
16059	DEVCON CORP	DANVERS MASS
16089	MICRO-TEK	BATON ROUGE 70806
16129	CAPACITOR MOUNTING CLIP CORP	DALLAS TEX
16231	PARKER INSTRUMENT CORP	STAMFORD CONN
16245	CONAP INC	ALLEGANY N Y
16332	MILWAUKEE RELAYS INC	CEDARBURG WIS
16339	PHOTO CHEMICAL PRODUCTS	SANTA MONICA CALIF
16352	COMPUTER DIODE CORP	LODI N J
16959	DENNISON MANUFACTURING COMPANY	FARMINGHAM,MASS

NUMERIC LIST OF MANUFACTURER CODES

CODE NO.	MANUFACTURER	ADDRESS
17069	CIRCUIT STRUCTURES LAB	SANTA ANA CALIF
17109	THERMONETICS INC	SANTA MONICA CALIF
17276	NEXUS RESEARCH LABORATORY INC	CANTON MASS
17397	BURGESS BATTERY CO	NEW YORK N Y
17414	ROWAN CONTROLLER CO	RED BANK N J
17856	SILICONIX INC	SUNNYVALE CAL
18034	NUCLEAR PRODUCTS CO	CLEVELAND OHIO
18154	FLO-LOK INC	HOUSTON TEX
18324	SIGNETICS CORP	SUNNYVALE CALIF
18626	DRIVER HARRIS CO	HARRISON N J
18643	ETHYLENE CORP	MURRAY HILL N J
18677	SCANBE MFG CORP	MONTEREY PARK CALIF
18873	DU PONT E I DE NEMOURS AND CO INC	WILMINGTON DEL
18911	DURANT MFG CO	MILWAUKEE WIS
18915	BIRTCHER CORP THE INDUSTRIAL DIVISION	MONTEREY PARK CALIF
19141	CAL-VAL R AND D CORP ISOMODE DIVISION	BURBANK, CALIF
19291	ECLIPSE FUEL ENGR CO	ROCKFORD ILL
19397	TRACOR INC (ROBT L STONE DIV)	AUSTIN TEX
19397	TRACOR INC	AUSTIN TEX
19477	ELECTRO-TECHNIQUES	LA HABRA CALIF
19701	ELECTRA MFG CO	INDEPENDENCE KANS
20093	ELECTRICAL INDUSTRIES DIV OF PHILIPS ELECTRONICS	MURRAY HILL N J
20512	SARGENT E H CO	SPRINGFIELD N J
21520	FANSTEEL METALLURGICAL CORP	NORTH CHICAGO ILL
21649	OTTO CONTROLS	MORTON GROVE ILL 60053
21926	GENERAL TECHNOLOGY CORP.	TORRANCE, CALIF
22474	NESCO INSTRUMENT DIV OF DATAPULSE INC	INGLEWOOD CALIF
22582	HAMILTON CO	WHITTIER CAL
22835	TRA-CON INC	MEDFORD MASS
22893	SHELL CHEMICAL CO	PITTSBURG, CALIF
23050	PRODUCT COMPONENTS CORPORATION	HASTINGS-ON-HUDSON N Y
23347	ROTO ACTUATOR CORP	ST CLAIR SHORES MICH
23732	TRACOR INC (SULZER DIV.)	ROCKVILLE,MD
24655	GENERAL RADIO CO	WEST CONCORD MASS
25709	GOW MACK INSTRUMENT CO	MADISON N J
25795	GRAINGER W W INC	CHICAGO ILL
26844	INJECTION MOLDERS SUPPLY CO INC	CLEVELAND OHIO
28520	HEYMAN MFG CO	KENILWORTH N J
29424	HOSKINS MFG CO	DETROIT MICH
30119	IDEAL INDUSTRIES INC	SYCAMORE ILL
30327	IMPERIAL EASTMAN CORP	CHICAGO ILL
31356	J B T INSTRUMENTS INC	NEW HAVEN CONN
35529	LEEDS AND NORTHRUP	PHILADELPHIA PA
37942	MALLORY P R AND CO INC	INDIANAPOLIS IND
38056	MANNING MAXWELL AND MOORE DIV OF DRESSER IND INC	STRATFORD CONN
38443	MARLIN-ROCKWELL CORP	JAMESTOWN N Y
39861	METAL GOODS CORP	ST LOUIS MO
40920	MINIATURE PRECISION BEARINGS INC	KEENE N H
41387	MOORE PRODUCTS CO	SPRINGE HOUSE PA
42190	MUTER CO	CHICAGO ILL
42498	NATIONAL CO INC	MALDEN MASS
42679	NATIONAL LEAD COMPANY	NEW YORK NY
44038	NORTH ELECTRIC CO	GALION OHIO
44197	NORTON CO	WORCESTER MASS
44655	OHMITE MFG CO	SKOKIE ILL
45681	PARKER HANNIFIN CORP.	CLEVELAND OHIO
46384	PENN ENGINEERING AND MFG CORP	DOYLESTOWN PA
52660	RYERSON JOSEPH T AND SON INC	CHICAGO ILL
53629	SCIENTIFIC GLASS APPARATUS CO	BLOOMFIELD N J
54294	SHALLCROSS MFG CO	SELMA N C
54636	SHERWIN-WILLIAMS	CLEVELAND OHIO
54715	SHURE BROS INC	EVANSTON ILL
55026	SIMPSON ELECTRIC CO	CHICAGO ILL
55130	SKINNER PRECISION INDUSTRIES INC	NEW BRITAIN CONN
55814	SOLA ELECTRIC CO	ELK GROVE ILL
56289	SPRAGUE ELECTRIC CO	NORTH ADAMS MASS
56631	STANDARD ELECTRIC TIME CO	SPRINGFIELD MASS
56878	STANDARD PRESSED STEEL CO PRECISION FASTNERS	JENKINTOWN PA
57163	STARRETT, L.S. CO.	ATHOL MASS
57771	STIMPSON EDWIN B CO	BROOKLYN N Y
58553	SUPERIOR VALVE AND FITTINGS CO	PITTSBURGH PA
59446	TELEX INC	ST PAUL MINN
59730	THOMAS AND BETTS CO	ELIZABETH N J
60380	TORRINGTON COMPANY	TORRINGTON CONN
60741	TRIPLETT ELECTRICAL INSTRUMENT CO	BLUFFTON OHIO
61349	UNITED STATES GAUGE DIV OF AMETEK	SELLERSVILLE PA
63060	VICTOREEN INSTRUMENT CO	CLEVELAND OHIO

NUMERIC LIST OF MANUFACTURER CODES

CODE NO.	MANUFACTURER	ADDRESS
64484	WELCH SCIENTIFIC CO	CHICAGO ILLINOIS 60610
65092	WESTON INSTR. INC.	NEWARK N J
65586	WIEGAND EDWIN L CO	PITTSBURGH PA
70119	ADVANCE ELECTRIC AND RELAY CO	BURBANK CALIF
70269	ALLEGHENY LUDLUM STEEL CORP	PITTSBURGH, PA
70276	ALLEN MFG CO	HARTFORD CONN
70309	ALLIED CONTROL CO INC	NEW YORK N Y
70318	ALLMETAL SCREW PRODUCTS COMPANY INC	GARDEN CITY N Y
70331	ALPHA WIRE CORP	NEW YORK N Y
70472	ASSOCIATED SPRING CORP	BRISTOL CONN
70528	ATLAS TACK CORP	FAINHAVEN MASS
70563	AMPERITE CO	UNION CITY N J
70661	ATLAS SOUND DIV OF AMERICAN TRADING AND PRODUCTION CORP	BROOKLYN N Y
70777	AUTOMATIC LOCKING DEVICES INC	BRIDGEPORT CONN
70884	BAYSTATE STAMPING CO	WORCESTER MASS
70892	BEAD CHAIN MFG CO	BRIDGEPORT CONN
70903	BELDEN MFG CO	CHICAGO ILL
71002	BIRNBACH RADIO CO INC	NEW YORK N Y
71034	BLILEY ELECTRIC CO INC	ERIE PA
71087	BOOTS AIRCRAFT NUT DIV TOWNSEND CO	NORWALK CONN
71098	BRISTOL CO READ INDUSTRIAL INSTRUMENT DIV	WATERBURY CONN
71191	BROWN, ANDREW CO.	LOS ANGELES CALIF
71218	BUD RADIO INC	WILLOUGHBY OHIO
71279	CAMBRIDGE THERMIONIC CORP	CAMBRIDGE MASS
71286	CAMLOC FASTNER CORP	PARAMUS N J 07652
71400	BUSSMAN MFG DIVISION OF MCGRAW-EDISON CO	ST LOUIS MO
71450	CTS CORP	ELKHART IND
71468	ITT CANNON ELECTRIC CO	LOS ANGELES CALIF
71482	CLARE C P AND CO	CHICAGO ILL
71590	CENTRALAB DIVISION OF GLOBE-UNION INC	MILWAUKEE WIS
71707	COTO-COIL CO INC	PROVIDENCE R I
71744	CHICAGO MINIATURE LAMP WORKS	CHICAGO ILL
71785	CINCH MFG CO AND HOWARD B JONES DIV	CHICAGO ILL
71913	DE-STA-CO CORP	DETROIT MICH
71984	DOW CORNING CORP	MIDLAND MICH
72136	ELECTRO MOTIVE MFG CO	WILLIMANTIC CONN
72228	CONTINENTAL SCREW CO	NEW BEDFORD MASS
72259	NYTRONICS INC	BERKELEY HEIGHTS N J
72271	EUTECTIC WELDING ALLOYS CORP	FLUSHING N Y
72307	FAHNESTOCK ELECTRIC CO	LONG ISLAND CITY NY
72354	FAST JOHN E CO DIVISION OF VICTOREEN INSTRUMENT CO	CHICAGO ILL
72512	DAVIES, HARRY MOLDING CO	CHICAGO ILL
72619	DIALIGHT CORP	BROOKLYN NY
72653	G C ELECTRONICS MFG CO	ROCKFORD ILL
72656	INDIANA GENERAL CORP ELECTRONICS DIVISION	KEASBY N J
72688	DOLPH JOHN C CO	MONMOUNTH JUNCTION N J
72699	GENERAL INSTRUMENT CORP	NEWARK N J
72765	DRAKE MFG CO	CHICAGO ILL
72794	DZUS FASTENER CO INC	WEST ISLIP N Y
72825	EBY HUGH H INC	PHILADELPHIA PA
72962	ELASTIC STOP NUT CORP OF AMERICA	UNION N J
72982	ERIE TECHNOLOGICAL PRODUCTS INC	ERIE PA
73138	HELIPOT DIVISION OF BECKMAN INSTRUMENTS INC	FULLERTON CALIF
73219	FISKE BROS REFINING	NEWARK N J
73293	HUGHES PRODUCTS DIV OF HUGHES AIRCRAFT CO	NEWPORT BEACH CALIF
73445	AMPEREX ELECTRONIC CO DIV OF NORTH AMERICAN PHILIPS CO INC	HICKSVILLE N Y
73506	BRADLEY SEMICONDUCTOR CORP	HAMDEN CONN
73559	CARLING ELECTRIC INC	HARTFORD CONN
73734	FEDERAL SCREW PRODUCTS CORP	CHICAGO ILL
73793	GENERAL INDUSTRIES CO.	DANVERS, MASS
73803	METALS AND CONTROLS INC. DIV OF TI	ATTLEBORO, MASS
73899	J F D ELECTRONICS CORP	BROOKLYN N Y
73949	GUARDIAN ELECTRIC MFG CO	CHICAGO ILL
73977	HANDY AND HARMON	NEW YORK N Y
74042	MERIT COIL AND TRANSFORMER CORP	HOLLYWOOD FLORIDA
74199	GUAM NICHOLS CO	CHICAGO ILL
74438	HOLLINGSHEAD R M CORP	CAMDEN N J
74440	HOBBS JOHN W CORP	SPRINGFIELD ILL
74445	HOLO-KROME SCREW CORP.	HARTFORD, CONN
74545	HUBBELL HARVEY INC	BRIDGEPORT CONN
74840	ILLINOIS CONDENSER CO	CHICAGO ILL
74900	INTERNATIONAL NICKEL CO INC	NEW YORK N Y
74970	JOHNSON E F CO	WASECA MINN
75042	INTERNATIONAL RESISTANCE CO	PHILADELPHIA PA
75165	JOHNS MANVILLE CORP	NEW YORK,NY
75263	KEYSTONE CARBON CO INC	ST MARYS PA
75285	KENNEDY CAR LINER AND BAG CO INC	SHELBYVILLE IND

NUMERIC LIST OF MANUFACTURER CODES

CODE NO.	MANUFACTURER	ADDRESS
75297	KESTER SOLDER COMPANY	CHICAGO ILL
75376	KURZ-KASCH INC	DAYTON OHIO
75378	KNIGHTS JAMES CO THE	SANDWICH ILL
75382	KULKA ELECTRIC MFG CO	MOUNT VERNON N Y
75582	LEVITON MFG CO	BROOKLYN N Y
75915	LITTELFUSE INC	DES PLAINES ILL
76101	MAICO ELECTRONICS	MINNEAPOLIS MINN
76323	M AND T CHEMICALS	CARTERET N J
76381	MINNESOTA MINING AND MFG CO	ST PAUL, MINN
76487	MILLEN JAMES MFG CO INC	MALDEN MASS
76493	MILLER J W CO	LOS ANGELES CALIF
76545	MUELLER ELECTRIC CO	CLEVELAND OHIO
76854	OAK MFG CO	CRYSTAL LAKE ILL
77247	PERMATEX CO INC	HUNTINGTON STATION N Y
77342	POTTER BRUMFIELD DIV OF AMF	PRINCETON IND
77342	AMERICAN MACHINE AND FOUNDRY CO POTTER AND BRUMFIELD DIV	PRINCETON IND
77820	BENDIX CORP, SCINTILLA DIV,	SIDNEY N Y
77969	RUBBERCRAFT CORP	TORRANCE CALIF
78189	SHAKEPROOF DIVISION OF ILLINOIS TOOL WORKS	ELGIN ILL
78277	SIGMA INSTRUMENTS INC	SO BRAINTREE MASS
78290	STRUTHERS-DUNN INC	PITMAN N J
78488	STACKPOLE CARBON CO	ST MARYS PA
78553	TINNERMAN PRODUCTS INC	CLEVELAND OHIO
78580	STERLING VARNISH CO,	SWICKLEY PENN
78696	TAYLOR CORP	VALLEY FORGE PA
78711	TELEPHONICS CORP	HUNTINGTON NY 11743
78947	UCINITE CO THE	NEWTONVILLE MASS
79061	VACO PRODUCTS INC	CHICAGO ILL
79136	WALDES KOHINOOR INC	LONG ISLAND CITY N Y
79142	VEEDER ROOT INC	HARTFORD CONN
79221	WATLOW ELECTRIC MFG CO	ST LOUIS MO
79405	WOOD ELECTRIC CORP,	ST, LYNN MASS
79687	WILLSON PRODUCTS INC	READING PA
79725	THE WIREMOLD CO	HARTFORD CONN
79727	CONTINENTAL-WIRT ELECTRONICS CORP	PHILADELPHIA PA
79963	ZIERICH MFGR CORP	NEW ROCHELLE, N, Y,
80103	LAMBDA ELECTRONICS CORP	HUNTINGTON N Y
80145	ASSEMBLY PRODUCTS INC	CHESTERLAND OHIO
80183	SPRAGUE PRODUCTS CO	NORTH ADAMS MASS
80223	UNITED TRANSFORMER CO	NEW YORK N Y
80251	FORMICA CORP	CINCINNATI OHIO
80294	BOURNS LABORATORIES INC	RIVERSIDE CALIF
80308	SOUTHERN SCREW CO	STATESVILLE N C
80411	ACRO DIV OF ROBERTSHAW CONTROLS	COLUMBUS OHIO
80583	HAMMARLUND CO INC	NEW YORK N Y
80640	STEVENS ARNOLD CO INC	BOSTON MASS
80740	BECKMAN INSTRUMENTS INC	FULLERTON CALIF
80798	CABOT CORP	BOSTON MASS
80813	DIMCO GRAY CO	DAYTON OHIO
80868	PHOTOCON RESEARCH PRODUCTS CO	PASADENA CALIF
81030	INTERNATIONAL INSTRUMENTS INC	ORANGE CONN
81073	GRAYHILL INC	LA GRANGE ILL
81095	TRIAD TRANSFORMER CORP	VENICE CALIF
81134	ELECTRO-VOICE INC	BUCHANAN MICH
81312	WINCHESTER ELECTRONICS CO INC	NORWALK CONN
81348	FEDERAL SPECIFICATIONS	GENERAL SERVICES ADMINISTRATION
81349	MILITARY SPECIFICATIONS	STD DIV DIR OF LOG SER DSA
81350	JOINT ARMY-NAVY SPECIFICATIONS	STD DIV DIR OF LOG SER DSA
81483	INTERNATIONAL RECTIFIER CORP	EL SEGUNDO CALIF
81640	CONTROLS COMPANY OF AMERICA	SELMA,NC
81812	TRIMM INC	LIBERTYVILLE ILL
81840	LEDEX INC	DAYTON OHIO
81904	CLOVER INDUSTRIES INC	TONAWANDA N Y
82107	AMERLINE CORP	CHICAGO ILL
82227	HAYDON A W CO	WATERBURY CONN
82389	SWITCHCRAFT INC	CHICAGO ILL
82768	PHILLIPS-ADVANCE CONTROL CO DIV OF PHILLIPS-ECKARDT ELECT CORP	JOLIET ILL
82877	ROTRON MFG CO INC	WOODSTOCK N Y
82879	ROYAL ELECTIC CORP	PAWTUCKET,RHODE ISLAND
82893	VECTOR ELECTRONIC CO	GLENDALE CALIF
83008	STACO INC	DAYTON OHIO
83014	HARTWELL CORP	LOS ANGELES CALIF
83125	GENERAL INSTRUMENT CORP CAPACITOR DIVISION	DARLINGTON S C
83186	VICTORY ENGINEERING CO	SPRINGFIELD N J
83241	FUSITE CORP	CINCINATI OHIO
83330	SMITH HERMAN H INC	BROOKLYN N Y
83332	TECH LABORATORIES INC	PALISADES PARK N J

NUMERIC LIST OF MANUFACTURER CODES

CODE NO.	MANUFACTURER	ADDRESS
83594	BURROUGHS CORP ELECTRONIC TUBE DIVISION	PLAINFIELD N J
83740	UNION CARBIDE CORP CONSUMER PRODUCTS DIV	NEW YORK N Y
83833	THOMAS AND SKINNER INC	INDIANAPOLIS IND
84171	ARCO ELECTRONICS INC	GREAT NECK N Y
84411	GOOD-ALL ELECTRIC MFG CO	OGALLALLA NEBR
84830	LEE SPRING CO., INC.	BROOKLYN,NEW YORK
84970	SARKES TARZIAN INC	BLOOMINGTON IND
84971	TA MFG CORP	LOS ANGELES CALIF 90039
85599	GENERAL ELECTRIC CO TUBE DEPT	SCHENECTADY N Y
86104	CELLUPLASTIC CORP	NEWARK N J
86335	GLENCO CORP	METUCHEN N J
86415	PAWTUCKET SCREW COMPANY	PAWTUCKET R I
86577	PRECISION METAL PRODUCTS CO	STONEHAM MASS
86603	PROTECTION PRODUCTS MFG CO [WELDWOOD CEMENT]	KALAMAZOO, MICH
86797	ROGAN BROS	SKOKIE ILL
86928	SEASTROM MFG CO INC	GLENDALE CALIF 91201
87034	MARCO-OAK INDUSTRIES A DIV OF ELECTRO/NETICS CORP	ANAHEIM CALIF
87187	KRYLON INC	NORRISTOWN PENN
87216	PHILCO CORP LANSDALE DIVISION	LANSDALE PA
87308	SOUTHERN SCREW CO	STATESVILL N C
87569	STEMCO CORP	CLEVELAND, OHIO
88044	AIR FORCE-NAVY AERONAUTICAL STD (AN) DWGS	DEPTS OF NAVY AND AIR FORCE
88145	IDEAL CORP	BROOKLYN N Y
88220	GOULD-NATIONAL BATTERIES INC	ST PAUL MINN
88245	U S ENGINEERING CO	VAN NUYS CALIF
88301	MYSTIK TYPE INC	NORTHFIELD, ILL
88303	PHILLIPS PROCESS CO.	ROCHESTER NY
88499	STAYTITE PRODUCTS CO	CLEVELAND, OHIO
88920	GRAPHIC CONTROLS CORP DETROIT DIV	LATHRUP VILLAGE MICH
89038	HOYT ELECTRICAL INSTRUMENT WORKS	PENACOOK N H
89307	SPRAGUE ENGINEERING DIVISION OF TELEDYNE INC	GARDENA CALIF
89469	BUCKEYE MOLDING CO	MIAMISBURG OHIO
89482	HOLTZER CABOT CORP	BOSTON MASS
89698	REES MACKWORTH G INC	DETROIT MICH
89904	WESTINGHOUSE ELECTRIC CORP LAMP DIVISION	TRENTON N J
90052	BOSTON GEAR WORKS DIV OF MURRAY CO OF TEXAS	PHILADELPHIA PA
90095	TECHNITROL ENGINEERING CO	PHILADELPHIA PA
90101	ADYU ELECTRONICS LAB. INC	PASSAIC NJ
90179	U.S. RUBBER CO. MECH. GOODS DIV.	PASSAIC NEW JERSEY
90411	BRISCOE MFG CO	COLUMBUS OHIO
90634	GULTON INDUSTRIES INC	METUCHEN N J
90797	MAGNETICS INC	BUTLER PA
91407	SUPERIOR ELECTRIC CO THE	BRISTOL CONN
91506	AUGAT INC	ATTLEBORO MASS
91556	BROOKS INSTRUMENT DIV EMERSON ELECTRIC	HATFIELD PA
91637	DALE ELECTRONICS INC	COLUMBUS NEBR
91662	ELCO CORP	WILLOW GROVE PA
91767	HELI-COIL CORP	DANBURY CONN
91821	JOHNSON BRONZE CO	NEW CASTLE PA
91881	MAGNETIC METALS CO	CAMDEN N J
91886	MALCO MFG CO	CHICAGO ILL
91927	MICRO METAL PRODUCTS INC	LOS ANGELES CALIF
91929	MINNEAPOLIS HONEYWELL MICROSWITCH DIV	FREEPORT ILL
92215	VOI-SHAN MFG CO	CULVER CITY CALIF
92264	ENGINEERED PRODUCTS CO	FLINT MICHIGAN 48501
92607	TENSOLITE INSULATED WIRE CO INC	TARRYTOWN N Y
92798	JOHNS-MANVILLE	MANVILLE NJ
92966	HUDSON LAMP COMPANY	KEARNY N J
93308	CLARK ELECTRONICS LABORATORIES	PALM SPRINGS CALIF
93332	SYLVANIA ELECTRONICS DIV	WOBURN MASS 01801
93460	WHITE SS DENTAL MFG CO	PRINCE BAY STATEN ISLAND NY 10309
93768	CLAUD S. GORDON CO.	RICHMOND ILL
93908	CARLON PRODUCTS CORP	AURORA OHIO
93990	CLIMAX METAL PRODUCTS	CLEVELAND, OHIO
93994	CHART PAK INC	LEEDS MASS
94139	KEYSTONE ELECTRONICS CO	NEWARK N J
94144	RAYTHEON CO INDUSTRIAL COMPONENTS	QUINCY MASS
94222	SOUTH CHESTER CORP	CHESTER, PA
94310	TRU-OHM PRODUCTS MEMCOR COMPONENTS DIVISION	HUNTINGTON IND
94499	ALPHA MOLYKOTE CORP	STANFORD CONN
94696	MAGNECRAFT ELECTRIC CO	CHICAGO ILL
95023	PHILBRICK GEORGE A RESEACHES INC	BOSTON MASS
95146	ALCO ELECTRONICS MFG CO	LAWRENCE, MASS
95263	LEECRAFT MFG CO. INC.	LONG ISLAND CITY NEW YORK
95265	NATIONAL COIL CO	SHERIDAN WYO
95275	VITRAMON INC	BRIDGEPORT CONN
95348	GORDOS CORP	BLOOMFIELD N J

NUMERIC LIST OF MANUFACTURER CODES

CODE NO.	MANUFACTURER	ADDRESS
95354	METHODE MANUFACTURING CO	CHICAGO ILL
95640	WESTRONICS	FORTWORTH TEX
95696	CADILLAC PLASTIC AND CHEMICAL CO	DETROIT MICH
96096	MILITARY STANDARDS	STD DIV DIR OF LOG SER DSA
96182	MASTER SPECIALTIES CO.	COSTA MESA CALIF
96256	THORDARSON-MEISSNER INC	MT CARMEL ILL
96336	ENSIGN-BICKFORD PRODUCTS	SIMSBURY CONN
96341	MICROWAVE ASSOCIATES INC	BURLINGTON MASS
96467	SUPERIOR MFG AND INSTRUMENT CORP	LONG ISLAND CITY N Y
96613	ALPHA METALS INC.	JERSEY CITY N J
96906	MILITARY STANDARD (MS) DRAWINGS	STD DIV DIR OF LOG SER DSA
97393	SHUR-LOK CORP	SANTA ANA CALIF
97464	INDUSTRIAL RETAINING RING CO	IRVINGTON N J
97539	A P M CORP	ENGLEWOOD N J
97814	SEALTRON CO	CINCINNATI OHIO
97852	STAR STAINLESS SCREW CO	PATTERSON N J
97954	U S COMPONENTS INC	NEW YORK N Y
97965	STANCOR ELECTRONICS INC	CHICAGO ILL
98159	RUBBER TECK INC	GARDENA CALIF
98278	MICRODOT INC	SOUTH PASADENA CALIF
98291	SEALECTRO CORP	MAMARONECK N Y
98376	ZERO MFG CO	BURBANK CALIF
98410	ETC INC	CLEVELAND OHIO
98911	ARMSTRONG PRODUCTS COMPANY	WARSAW INDIANA 56580
98978	INTERNATIONAL ELECTRONIC RESEARCH CORP	BURBANK CALIF
98991	WORCESTER VALVE CO INC	WORCESTER MASS
98996	OLYMPIC SCREW AND RIVET CO	DOWNEY CAL
98997	SIGHTMASTER CORP	PROVIDENCE,RHODE ISLAND
99114	HITEMP WIRES INC	WESTBURY N Y
99127	BALCO RESEARCH LABORATORIES	NEWARK N J
99164	ALLEN ORGAN CO.	MACUNGIA,PA
99378	ATLEE CORP	WINCHESTER MASS
99515	MARSHALL INDUSTRIES ELECTRON PRODUCTS DIV	PASADENA,CALIF
99515	ELECTRON PRODUCTS (DIV OF MARSHALL INDUSTRIES)	SAN MARINO CALIF
99800	DELEVAN ELECTRONICS CORP	EAST AURORA N Y
99934	RENBRANDT INC	BOSTON MASS
99942	HOFFMAN ELECTRONICS CORP SEMICONDUCTOR DIVISION	EL MONTE CALIF

SECTION VIII

SCHEMATIC DIAGRAMS AND ASSEMBLY DRAWINGS

8-1 INTRODUCTION

8-2 All but a few of the components of the Model 599J receiver are mounted on printed circuit boards or terminal boards. To aid in component identification, an assembly drawing of each printed circuit or terminal board is shown adjacent to the schematic diagram which represents the board (or boards).

8-3 A unifying approach is taken in that the schematic diagrams and assembly drawings are presented here in the order in which they appear in the receiver from right to left (facing the front panel). The four modules are connected through the wiring on the Connector Panel assembly, the schematic diagram of which is shown first.

8-4 Next the Receiver/Synthesizer module is broken down into its seven standard printed circuit boards. Similarly, the boards of the AGC/Phase Module, the Phase Servo Module, and the Power Supply Module are shown in that order.

8-5 The location of any component not mounted on a printed circuit or terminal board will be noted adjacent to the component symbol on the appropriate schematic diagram.

8-6 OPTIONS

8-7 Schematic diagrams and assembly drawings of optional elements for the Model 599J receiver are shown in appropriate sections of the Appendix of this manual.

8-8 SCHEMATIC DIAGRAMS AND ASSEMBLY DRAWINGS

8-9 The schematic diagrams and assembly drawings are listed by title, drawing number, and page number. Diagrams and drawings that are indented are subordinate to the assembly that they are listed under.

Title	Drawing No.	Page No.
VLF/LF Tracking Receiver Model 599J, Assembly Drawing	599763	8-5
Connector Panel Assembly, Assembly Drawing	599768	8-7
Connector Panel Assembly, Schematic Diagram	599769	8-7
Rcvr/Syn/Rec Model 599-204, Assembly Drawing	599749	8-9
Rcvr/Syn/Rec Model 599-204, Schematic Diagram	599750	8-9
Reference Divider P.C. Board, Assembly Drawing	599735	8-11
Reference Divider, Schematic Diagram	599708	8-11
Second and Third Decades P.C. Board, Assembly Drawing	599738	8-13
Second and Third Decades, Schematic Diagram	599711	8-13
First Decade P.C. Board, Assembly Drawing	599737	8-15
First Decade, Schematic Diagram	599710	8-15
Phase Detector/VCO P.C. Board, Assembly Drawing	599736	8-17
Phase Detector/VCO, Schematic Diagram	599709	8-17
IF Amplifier P. C. Board, Assembly Drawing	599746	8-19
IF Amplifier, Schematic Diagram	599706	8-19

Title	Drawing No.	Page No.
Sequencer/Dual Modulator P.C. Board, Assembly Drawing	599747	8-21
Sequencer/Dual Modulator, Schematic Diagram	599707	8-21
RF Preamp/Blanking P.C. Board, Assembly Drawing	9748	8-23
RF Preamp/Blanking, Schematic Diagram	9747	8-23
AGC/Phase Module Model 599-303, Assembly Drawing	599761	8-25
AGC/Phase Module Model 599-303, Schematic Diagram	599771	8-25
Phase Channel P.C. Board, Assembly Drawing	599829	8-27
Carrier Channel Terminal Assembly P.C. Board, Assembly Drawing	599799	8-27
Phase Servo Module Model 599-204, Schematic Diagram	599395	8-29
Phase Shifters P.C. Board, Assembly Drawing	599570	8-29
Phase Shifters/Phase Comparator, Schematic Diagram	599396	8-31
Local Osc, Limiter/Filter P.C. Board, Assembly Drawing	599569	8-33
Local Osc, Limiter/Filter, Integrator, Schematic Diagram	599392	8-33
Power Supply Model 599-502, Assembly Drawing	599723	8-35
Power Supply Module P.C. Board, Assembly Drawing	599721	8-35
Power Supply Model 599-502, Schematic Diagram	599726	8-37

SECTION IX

PREVENTIVE MAINTENANCE INSTRUCTIONS

9.1 Scope of Maintenance

The maintenance duties assigned to the operator and organizational repairman of this equipment are listed below with a reference to the paragraphs covering the specific maintenance functions. The preventive maintenance procedures require no special tools or test equipment.

a. Daily preventive maintenance checks and services (para 9.5).

b. Weekly preventive maintenance checks and services (para 9.6).

c. Monthly preventive maintenance checks and services (para 9.7).

d. Quarterly preventive maintenance checks and services (para 9.9).

e. Cleaning (para 9.11).

f. Touchup painting instructions (para 9.12).

9.2 Materials Required for Maintenance

a. Trichloroethane (Federal stock no. 6810-292-9625).

WARNING

> The fumes of trichloroethane are toxic. Provide thorough ventilation whenever used. DO NOT use near an open flame. Trichloroethane is not flammable, but exposure of the fumes to an open flame converts the fumes to highly toxic, dangerous gases.

b. Cleaning cloth.

c. Fine sandpaper.

d. Touchup paint

9.3 Preventive Maintenance

Preventive maintenance is the systematic care, servicing, and inspection of the equipment to prevent the occurrence of trouble, to reduce downtime, and to assure that the equipment is serviceable.

a. Systematic Care. The procedure given in paragraphs 9.5 through 9.12 covers routine systematic care and cleaning essential to proper upkeep and operation of the equipment.

b. Preventive Maintenance Checks and Services. The maintenance checks and services charts outline functions to be performed at specific intervals. These checks and services are to maintain equipment in a

combat serviceable condition; that is, in good general (physical) condition and in good operating condition. To assist operators in maintaining combat serviceability, the charts indicate what to check, how to check, and the normal conditions. The reference column lists the paragraphs that contain additional information. If the defect cannot be found by performing the corrective action indicated, higher category of maintenance or repair is required. Records and reports of these checks and services must be made in accordance with the requirements set forth in TM 38-750.

9.4 Preventive Maintenance Checks and Service Periods

Preventive maintenance checks and services of this equipment are required daily, weekly, monthly, and quarterly. Daily maintenance checks and services are specified in paragraph 9.5. Paragraph 9.6 specifies checks and services that must be performed weekly. If the equipment is maintained in a standby condition, the daily and weekly checks should be accomplished at the same time. The maintenance checks and services that are accomplished monthly are specified in paragraph 9.7. Quarterly maintenance checks and services are specified in paragraph 9.9.

9.5 Daily Preventive Maintenance Checks and Services Chart

Sequence No.	Items to be inspected	Procedure	Reference
1	Completeness	See that the equipment is complete.	App E
2	Cleanliness	Exterior of equipment must be clean and dry, free of fungus, dirt, dust, or grease.	Para 9.11
3	Operational check	Check the operational efficiency.	
4	Controls	See that controls operate smoothly and are fastened in place securely.	

9.6 Weekly Preventive Maintenance and Services Chart

Sequence No.	Items to be inspected	Procedure	Reference
1	Cables	Inspect cards and cables for chafed, cracked, or frayed insulation. Replace connectors that are broken, stripped, or worn.	
2	Metal surfaces	Inspect exposed metal surface for rust and corrosion. Clean and touch up with paint as required.	Para 9.11 and 9.12

9.7 Monthly Maintenance

Perform the maintenance functions indicated in the monthly preventive maintenance checks and services chart (para 9.8) once each month. Periodic daily (para 9.5) and weekly (para 9.6) services constitute a part of the monthly checks.

9.8 Monthly Preventive Maintenance Checks and Services Chart

Sequence No.	Items to be inspected	Procedure
1	Terminations	Inspect for loose connections and cracked or broken insulation.
2	Control panel	Clean panel thoroughly and check all surfaces for chips, cracks, or abnormal wear.
3	Hardware	Inspect all hardware for possible damage.
4	Vent holes	Clean vent holes.

9.9 Quarterly Maintenance

Quarterly preventive maintenance checks and services are required for this equipment. Periodic daily, weekly, and monthly services constitute a part of the quarterly preventive maintenance checks and services and must be performed concurrently. All deficiencies or shortcomings will be recorded in accordance with the requirements of TM 38-750. Perform all the checks and services listed in the quarterly preventive maintenance checks and services chart (para 9.10) in the sequence listed. Adjustment of the maintenance interval must be made to compensate for any unusual operating conditions.

9.10 Quarterly Preventive Maintenance Checks and Services Chart

Sequence No.	Items to be inspected		Reference
1	Publications	See that all publications are complete, serviceable, and current.	DA Pam 310-4
2	Modifications	Check DA Pam 310-7 to determine whether new applicable MWO's have been published. All URGENT MWO's must be applied immediately. All NORMAL MWO's must be scheduled.	TM 38-750 and DA Pam 310-7

9.11 Cleaning

Inspect the exterior surfaces. The surfaces must be free of dust, dirt, grease, and fungus.

a. Remove dust and loose dirt with a clean, soft cloth.

b. Remove grease, fungus, and ground-in dirt. Use a damp cloth (not wet) with trichloroethane to clean terminations. If dirt on the body of the unit is difficult to remove, use mild soap and water.

c. Remove dust or dirt from the jacks and plugs with a brush.

9.12 Touchup Painting Instructions

Remove dust and corrosion from metal surfaces by lightly sanding them with fine sandpaper. Brush two thin coats of paint on the bare metal to protect it from further corrosion. Refer to applicable cleaning and refinishing practices specified in TB 746-10.

APPENDIX A

AUDIO AMPLIFIER OPTION

A-1 INTRODUCTION

A-2 The Audio Amplifier option allows aural monitoring of the received signal by means of an internal loudspeaker in lieu of earphones. The purpose of the circuitry described here is to derive from the receiver's IF output, a non-coherent signal sufficient to drive the loudspeaker. It is clear that a coherent signal would cause frequency or phase offsets in the sensitive receiver. An additional benefit with this option is a 3 db improvement in the signal/noise ratio in the audio output. Figure A-1 shows, basically, how the non-coherent signal is derived.

A-3 The option consists entirely of a single printed circuit board assembly (Assembly 599800) which plugs directly into the 599-204 module. With the board installed, either the internal loudspeaker or earphones may be used for aural monitoring. When the earphone plug is connected, the loudspeaker is muted.

A-4 INSTALLATION AND OPERATION

A-5 Assembly 599800 should be plugged into J5 of the 599-204 module (see assembly drawing 599749).

A-6 The only operating instructions required are:

(1) Disconnect earphone plug

(2) Adjust VOLUME control to desired level

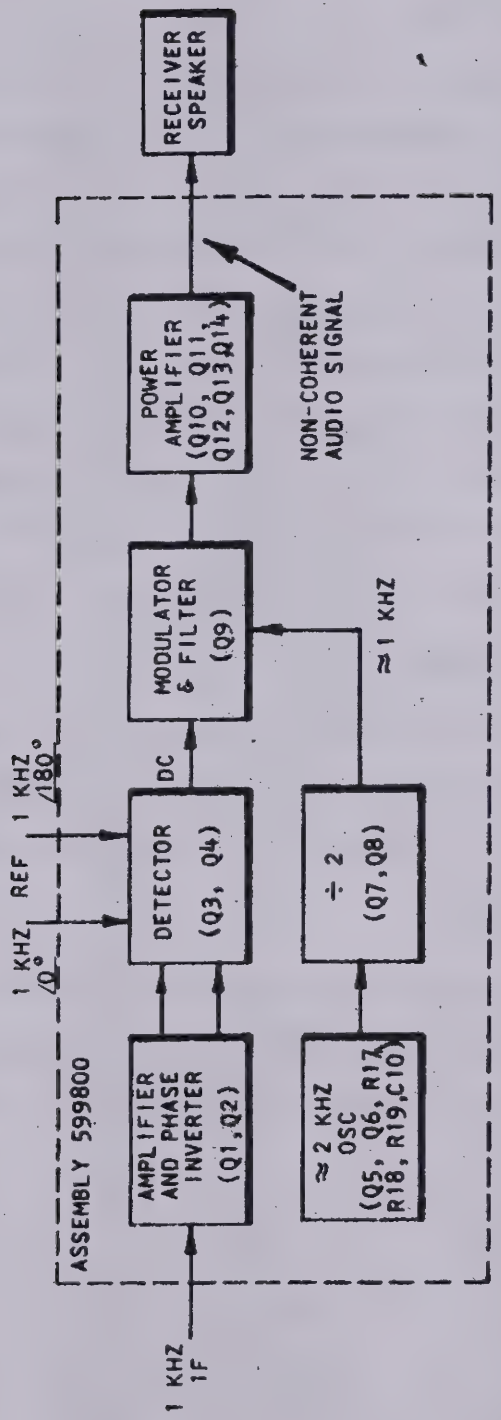

A6-86-9

Figure A-1. Basic Block Diagram of Audio Amplifier Circuit

A-7 THEORY OF OPERATION

A-8 The 1 kHz IF signal is amplified and phase inverted by Q1 and Q2 (see schematic diagram 599780). Q3 and Q4 form a detector circuit which develops a dc voltage across the C4 and C5 combination. Q5 and Q6 with R17, 18, and 19 and C10 form an unstable oscillator with nominal frequency 2 kHz. This output is divided by 2 by the binary consisting of Q7 and Q8. The field-effect transistor, Q9, is used to remodulate the detected 1 kHz IF signal with the nominal 1 kHz output from the binary. The output from Q9 is filtered by R30, C14, C15, and R31 to an approximate sine wave which is then amplified to drive the loudspeaker.

A-9 ADJUSTMENT PROCEDURE

A-10 With reference to schematic diagram 599780 and assembly drawing 599800, proper adjustment of the audio remodulator frequency should proceed as described in paragraph 6-35.

A-11 REPLACEABLE PARTS

A-12 The following pages contain an Item/Reference Designation Index and a List of Replaceable Parts. Information concerning the use of these will be found in paragraphs 7-1 through 7-6.

ITEM NUMBER	REFERENCE DESIGNATION	TRACOR STOCK NUMBER	DESCRIPTION	STOCK NUMBER USED ON
			BOARD PC ASSY AUD AMP	599800
1		599764	BOARD PC	599800
7		3326-0046	RIVETS	599800
8		8819-0022	BUS WIRE NO 22 AWG	599800
9		3657-0001	TRANSIPAD	599800
10		82	TRANSIPAD	599800
57	C 1	21485-9101	CAP 1X0MFD 35V	599800
55	C 2	8917-0390	CAP 39MFD 10V	599800
57	C 3	21485-9101	CAP 1X0MFD 35V	599800
47	C 4	3324-9222	CAP X22MFD	599800
47	C 5	3324-9222	CAP X22MFD	599800
54	C 6	8917-0121	CAP 120MFD 10V	599800
54	C 7	8917-0121	CAP 120MFD 10V	599800
50	C 8	3338-0251	CAP 250MFD 12V	599800
50	C 9	3338-0251	CAP 250MFD 12V	599800
46	C 10	3324-9103	CAP X01MFD	599800
52	C 11	3924-0470	CAP 47PF	599800
57	C 12	21485-9101	CAP 1X0MFD 35V	599800
52	C 13	3924-0470	CAP 47PF	599800
49	C 14	3324-9474	CAP X0047MFD	599800
57	C 15	21485-9101	CAP 1X0MFD 35V	599800
50	C 16	3338-0251	CAP 250MFD 12V	599800
48	C 17	3324-9333	CAP X033MFD	599800
56	C 18	8918-0331	CAP 330MFD 6V	599800
53	L 1	3925-0004	FERITE BEAD INDUCTOR	599800
53	L 2	3925-0004	FERITE BEAD INDUCTOR	599800
45	P 1	3318-0028	CONN PCB	599800
42	Q 1	900-3705	TRANSISTOR 2N3705	599800
42	Q 2	900-3705	TRANSISTOR 2N3705	599800
41	Q 3	900-3702	TRANSISTOR 2N3702	599800
41	Q 4	900-3702	TRANSISTOR 2N3702	599800
39	Q 5	900-0708	TRANSISTOR 2N708	599800
41	Q 6	900-3702	TRANSISTOR 2N3702	599800
40	Q 7	900-3646	TRANSISTOR 2N3646	599800
40	Q 8	900-3646	TRANSISTOR 2N3646	599800
44	Q 9	900-3819	TRANSISTOR 2N3819	599800
43	Q 10	900-3710	TRANSISTOR 2N3710	599800
41	Q 11	900-3702	TRANSISTOR 2N3702	599800
38	Q 12	900-0697	TRANSISTOR 2N697	599800
41	Q 13	900-3702	TRANSISTOR 2N3702	599800
38	Q 14	900-0697	TRANSISTOR 2N697	599800
32	R 1	212-3160	RES 316 OHMS	599800
31	R 2	212-2870	RES 287 OHMS	599800
22	R 3	200-0331	RES 330 OHMS	599800
34	R 4	212-4221	RES 4X22K	599800
28	R 5	200-9271	RES 2X7 OHMS	599800
33	R 6	212-3830	RES 383 OHMS	599800
36	R 7	212-8251	RES 8X25K	599800
34	R 8	212-4221	RES 4X22K	599800
28	R 9	200-9271	RES 2X7 OHMS	599800
36	R 10	212-8251	RES 8X25K	599800
25	R 11	200-0472	RES 4X7K	599800
30	R 12	212-1212	RES 12X1K	599800
30	R 13	212-1212	RES 12X1K	599800
25	R 14	200-0472	RES 4X7K	599800
26	R 15	200-0473	RES 47K	599800
17	R 16	200-0221	RES 220 OHMS	599800
35	R 17	212-4642	RES 46X4K	599800
20	R 18	200-0270	RES 27 OHMS	599800
51	R 19	3838-0103	RES 10K VAR	599800
12	R 20	200-0121	RES 120 OHMS	599800
26	R 21	200-0473	RES 47K	599800
16	R 22	200-0182	RES 1X8K	599800
16	R 23	200-0182	RES 1X8K	599800
14	R 24	200-0153	RES 15K	599800
14	R 25	200-0153	RES 15K	599800
26	R 26	200-0473	RES 47K	599800
19	R 27	200-0225	RES 2X2 MEGO	599800
21	R 28	200-0274	RES 270K	599800
13	R 29	200-0123	RES 12K	599800
23	R 30	200-0333	RES 33K	599800
15	R 31	200-0154	RES 150K	599800
11	R 32	200-0103	RES 10K	599800
24	R 33	200-0471	RES 470 OHMS	599800
27	R 34	200-0561	RES 560 OHMS	599800
25	R 35	200-0472	RES 4X7K	599800
18	R 36	200-0222	RES 2X2K	599800
29	R 37	200-9471	RES 4X7 OHMS	599800
29	R 38	200-9471	RES 4X7 OHMS	599800
24	R 39	200-0471	RES 470 OHMS	599800
37	CR 1	800-0914	DIODE IN914	599800
37	CR 2	800-0914	DIODE IN914	599800

ITEM/REFERENCE DESIGNATION INDEX

DATE 03/09/67

ITEM NUMBER	REFERENCE DESIGNATION	TRACOR STOCK NUMBER	DESCRIPTION	STOCK NUMBER USED ON
37	CR 3	800-0914	DIODE IN914	599800
37	CR 4	800-0914	DIODE IN914	599800
37	CR 5	800-0914	DIODE IN914	599800

LIST OF REPLACEABLE PARTS DATE 03/09/67

TRACOR STOCK NUMBER	DESCRIPTION	MFGR CODE	MANUFACTURER PART NUMBER	TOTAL QUANTITY	U/M
82	MOUNT TSTR	17069	88000	2.	EA
200-0103	RES FXD COMP 10 K	01121	RC07GF103K (MIL-R-11/8)	1.	EA
200-0121	RES FXD COMP 120 OHM	01121	RC07GF121K (MIL-R-11/8)	1.	EA
200-0123	RES FXD COMP 12 K	01121	RC07GF123K (MIL-R-11/8)	1.	EA
200-0153	RES FXD COMP 15 K	01121	RC07GF153K (MIL-R-11/8)	2.	EA
200-0154	RES FXD COMP 150 K	01121	RC07GF154K (MIL-R-11/8)	1.	EA
200-0182	RES FXD COMP 1X8 K	01121	RC07GF182K (MIL-R-11/8)	2.	EA
200-0221	RES FXD COMP 220 OHM	01121	RC07GF221K (MIL-R-11/8D)	1.	EA
200-0222	RES FXD COMP 2X2K	01121	RC07GF222K (MIL-R-11/8D)	1.	EA
200-0225	RES FXD COMP 2X2 M	01121	RC07GF225K (MIL-R-11/8)	1.	EA
200-0270	RES FXD COMP 27 OHM	01121	RC07GF270K (MIL-R-11/8D)	1.	EA
200-0274	RES FXD COMP 270K	01121	RC07GF274K (MIL-R-11/8D)	1.	EA
200-0331	RES FXD COMP 330 OHM	01121	RC07GF331K (MIL-R-11/8D)	1.	EA
200-0333	RES FXD COMP 33K	01121	RC07GF333K (MIL-R-11/8D)	1.	EA
200-0471	RES FXD COMP 470 OHM	01121	RC07GF471K (MIL-R-11/8D)	2.	EA
200-0472	RES FXD COMP 4X7K	01121	RC07GF472K (MIL-R-11/8D)	3.	EA
200-0473	RES FXD COMP 47K	01121	RC07GF473K (MIL-R-11/8D)	3.	EA
200-0561	RES FXD COMP 560 OHM	01121	RC07GF561K (MIL-R-11/8D)	1.	EA
200-9271	RES FXD COMP 2X7 OHM	01121	RC07GF2R7K (MIL-R-11/8D)	2.	EA
200-9471	RES FXD COMP 4X7 OHM	01121	RC07GF4R7K (MIL-R-11/8D)	2.	EA
212-1212	RES FXD FILM 12X1 K	91637	RN60D1212F (MIL-R-10509/1)	2.	EA
212-2870	RES FXD FILM 287 OHM	91637	RN60D2870F (MIL-R-10509/1)	1.	EA
212-3160	RES FXD FILM 316 OHM	91637	RN60D3160F (MIL-R-10509/1)	1.	EA
212-3830	RES FXD FILM 383 OHM	91637	RN60D3830F (MIL-R-10509/1)	1.	EA
212-4221	RES FXD FILM 4X22K	01295	RN60D4221F (MIL-R-10509/1)	2.	EA
212-4642	RES FXD FILM 46X4K	01121	RN60D4642F (MIL-R-10509/1)	1.	EA
212-8251	RES FXD FILM 8X25 K	91637	RN60D8251F (MIL-R-10509/1)	2.	EA
800-0914	DIODE 1N914	01295	1N914	5.	EA
900-0697	TSTR 2N697	24446	2N697	2.	EA
900-0708	TSTR 2N708	01295	2N708	1.	EA
900-3646	TSTR 2N3646	13715	2N3646	2.	EA
900-3702	TSTR 2N3702	01295	2N3702	5.	EA
900-3705	TSTR 2N3705	01295	2N3705	2.	EA
900-3710	TSTR 2N3710	01295	2N3710	1.	EA
900-3819	TSTR 2N3819	01295	2N3819	1.	EA
3318-0028	CONN PLUG ELEC 22 PIN	02660	133-022-03	1.	EA
3324-9103	CAP FXD MYL X01 MFD	56289	192P10392	1.	EA
3324-9222	CAP FXD MYL X22 MFD	56289	192P22492	2.	EA
3324-9333	CAP FXD MYL X033MFD	56289	192P33392	1.	EA
3324-9474	CAP FXD MYL X0047MFD	56289	192P47492	1.	EA
3326-0046	RIVET POP 1/8X481	04707	AD46BS	2.	EA
3338-0251	CAP FXD ELECT 250 MFD	56289	TE-1138 OR 30D257G012DH0	3.	EA
3657-0001	PAD MTG TSTR	07047	10171-N	3.	EA
3838-0103	RES VAR 10 K	73138	62P R10K	1.	EA
3924-0470	CAP FXD CER 47 PFD	00656	MC-70-B-470AM	2.	EA
3925-0004	SHIELD BEAD	02114	K5-001-00/3B	2.	EA
8819-0022	WIRE BUS BAR 22AWG	70903	8021	6.	IN
8917-0121	CAP FXD TA 120 10V	01295	CS13BC127K (MIL-C-26655/2D)	2.	EA
8917-0390	CAP FXD TA 39 MFD	05397	CS13BC396K (MIL-C-26655/2D)	1.	EA
8918-0331	CAP FXD TA 330 MFD	05397	CS13BB337K (MIL-C-26655/2D)	1.	EA
21485-9101	CAP FXD TA 1X0 MFD	05397	CS13BF105K (MIL-C-26655/2D)	4.	EA
599764	BOARD PC	19397	599764	1.	EA

A-13 SCHEMATIC DIAGRAM AND ASSEMBLY DRAWING

Title	Drawing No.	Page No.
Audio Amplifier P.C. Board, Assembly Drawing	599800	A-9
Audio Amplifier, Schematic Diagram	599780	A-9

APPENDIX B

RECORDER OPTION

B-1 INTRODUCTION

B-2 With this option the relative phase difference between the local frequency standard and the VLF/LF carrier is recorded on a built-in, inkless strip chart recorder. Standard chart speed for this recorder is 1 inch per hour. Other chart speeds are available on special order. Phase sensitivity (full scale recorder deflection) of either 10 μsec or 100 μsec can be selected by means of the rear panel INTERNAL RECORDER switch. Note: Chart drive motor stops during ac power off times. If the system is operated from STANDBY power, the internal recorder function is lost. A dc chart drive motor is available on special order.

B-3 ADJUSTMENT PROCEDURES

B-4 The recorder is adjusted at the factory for proper full scale deflection. If subsequent adjustment becomes necessary, the following procedures will apply:

(1) Remove the 599-204 module from the chassis frame and use two 24 terminal jumper cables to connect the connectors (P1, J1, and P2, J2) which are mated when the 599-204 module is installed normally. Note: Before applying power, verify that the corresponding connectors are connected by the jumper cables. Improper connection will damage the receiver.

(2) Remove the removable silver plug from the top front of the recorder. Note adjustment screw.

(3) While actuating the ZERO pushbutton (PUSH TO SET RECORDER LEVELS) on the rear panel, adjust the screw exposed in step (2) until the recorder reads zero.

(4) Locate R4, a 5K ohm potentiometer mounted in the 599-204 module (see assembly drawing 599749).

(5) While actuating the FULL SCALE pushbutton on the rear panel, adjust R4 for full scale (100) deflection of recorder.

(6) Disconnect jumper cables and reinstall the 599-204 module in the chassis as recommended in paragraph 4-6.

B-5 CIRCUIT CONNECTIONS

B-6 The Optional Recorder is a discrete component complete within itself (except for power and input). All connections are made through J13 shown on schematic diagram 599750 and assembly drawing 599749.

B-7 REPLACEABLE PARTS

B-8 The following page contains an Item/Reference Designation Index and a List of Replaceable Parts. Instructions for the use of this index and list are found in paragraphs 7-1 through 7-6.

ITEM/REFERENCE DESIGNATION INDEX DATE 12/21/67

ITEM NUMBER	REFERENCE DESIGNATION	TRACOR STOCK NUMBER	DESCRIPTION	STOCK NUMBER USED ON
			RECORDER OPTION ASSY	599851-0002
2		599665	MANUAL CHART RECORDER	599851-0002
5		620-0125	WASHER IT LOCK NO 6	599851-0002
6		651-0017	NUT 6-32	599851-0002
1	A 1	599287-0008	RECORDER CHART	599851-0002
3	MP 1	599666	SCALE CHART	599851-0002
4	MP 2	3650-0001	PAPER CHART ROLL	599851-0002

LIST OF REPLACEABLE PARTS DATE 12/21/67

TRACOR STOCK NUMBER	DESCRIPTION	MFGR CODE	MANUFACTURER PART NUMBER	TOTAL QUANTITY	U/M
620-0125	WASHER LOCK INT NO 6	73734	1304	6.	EA
651-0017	NUT HEX 6-32X1/4 AF	73734	8005 STL CAD PL	6.	EA
3650-0001	PAPER CHART ROLL	14869	TYPE A	2.	EA
599287-0008	RECORDER CHART	19397	599287-0008	1.	EA
599665	MANUAL CHART RECORDER	19397	599665	1.	EA
599666	SCALE CHART	19397	599666	1.	EA

APPENDIX C

OMEGA OPTION

C-1 INTRODUCTION

C-2 The OMEGA Option permits the Model 599J VLF phase-tracking receiver and the Model 533 OMEGA Gating Unit to operate together for tracking time-shared OMEGA transmissions. The Option Kit contains the following items:

A. An AGC clamping board

B. An OMEGA cable

C. Installation instructions

D. Required hardware

C-3 The AGC clamping Board (PCB Assembly 599790) is used to provide proper AGC action when tracking short duty-cycle OMEGA stations and is installed in the AGC-Phase Module.

C-4 The OMEGA Cable (TRACOR No. 6788) provides for all interconnections between the OMEGA Gating Unit and the VLF Receiver except for the OMEGA Gating Unit's 100 CPS IN. This has to be taken from the receiver's COHERENT 100 Hz OUTPUT with a separate cable.

C-5 SPECIFICATIONS

C-6 The receiver's specifications with the OMEGA Modification are the same as the receiver alone but for the following:

A. The COHERENT 100 Hz OUTPUT is 8 volts nominal instead of 0.5 volts nominal.

B. The signal/noise ratio is slightly degraded (see following section for explanation).

C-7 THEORY OF OPERATION

C-8 A block diagram of the AGC clamping function is shown in Figure C-1. The AGC clamping circuit convert the dc amplifier's open-loop gain to unity by positive signal feedback and dc offset adjustment. When the carrier is off, the carrier relay, K301, (schematic diagram 599771) transfers the amplifier's input to the clamping circuit's output, thus maintaining the same AGC level. R802, R803, and R804 (schematic diagram 599798) adjust the bias while R801, R805 and R808 provide proper signal level.

C-9 During OMEGA operation, K301 is operated by the OMEGA Gating Unit through R806 (schematic diagram 599798).

C-10 The AGC synchronous detector's time constant (see schematic diagram 599771) is decreased with this option by replacing C307 (599771) with C801 and C802 (599798). By decreasing the time constant to allow for the short OMEGA transmission "on" time the signal/noise ratio of the receiver is slightly degraded.

C-11 The signal level at the receiver's COHERENT 100 Hz OUTPUT is increased with this option to ensure compatibility with the OMEGA Gating Unit.

C-12 ADJUSTMENT AND TEST PROCEDURES

C-13 With reference to schematic diagram 599798 and assembly drawing 599790 the adjustment of the OMEGA Option should proceed

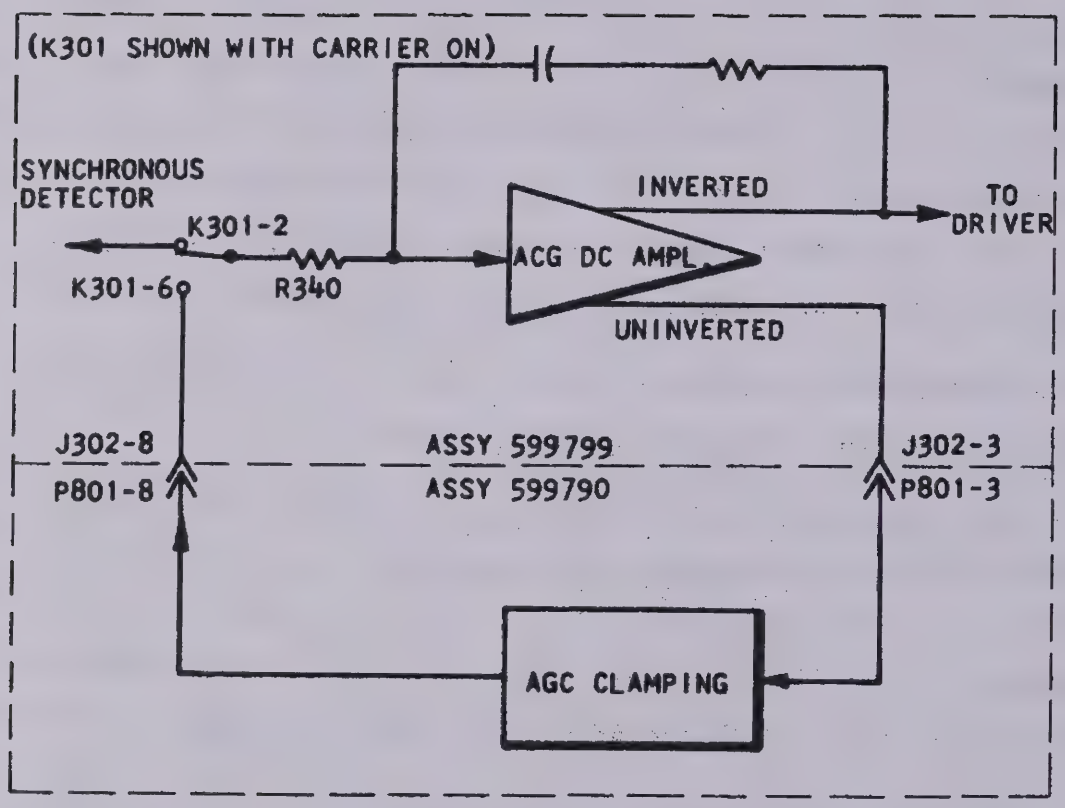

A6-86-14

Figure C-1. Block Diagram of AGC Clamping Function.

as follows:

(1) Connect one end of the OMEGA Cable 6788 to CHANNEL I of an OMEGA Gating Unit Model 533 and the other end to a modified receiver's RECORD OUTPUT.

(2) Connect another cable between J11 of the receiver and the OGU's 100 CPS IN.

(3) Turn the OGU's CHANNEL I selector switch to ON.

(4) Tune the receiver to a station or test signal. An OMEGA station or any other station which has similar long periods should not be used.

(5) Place the OMEGA/NORMAL switch on the OGU clamping board to NORMAL and check the receiver for normal operation.

(6) With the OMEGA/NORMAL switch in the OMEGA position verify that the CARRIER and SFERICS lamps are off.

(7) With the CHANNEL I selector in the OFF position verify that the CARRIER and SFERICS lamps are on.

(8) With the CHANNEL I selector in the H position verify that the CARRIER and SFERICS lamps are OFF only when the OGU's CHANNEL I light is on.

(9) Set R808 in the AGC clamping circuit 5 turns from its full CW position.

(10) Return the CHANNEL I selector to ON.

(11) Set the LOC OSC switch to -1 KHZ.

(12) Set the receiver's CARRIER LEVEL meter to approximately zero db with the gain control.

(13) Rotate the CHANNEL I selector to OFF.

(14) Adjust R803 in the AGC clamping circuit for CARRIER LEVEL meter drift of less than 2 db per minute in the negative direction.

(15) Return the CHANNEL I selector to ON and switch the receiver's LOC OSC to +1 KHZ.

(16) Again, with the gain control, set the CARRIER LEVEL to approximately zero db.

(17) Turn CHANNEL I selector to OFF and note carefully the CARRIER LEVEL meter drift:

(a) If negative and greater than 2 db/min., make 2½ turns CCW on R808 and repeat steps 10 through 17 until the drift is less than 2 db/min.

(b) If positive, make 2½ turns CW on R808 and repeat steps 10 through 17 until the drift is negative and is less than 2 db/min.

(18) Adjust the RANGE RATE KNOTS CHANNEL I control to +20 (Model 533S) or +250 (Model 533A) and verify it takes about 30 seconds for the MICROSECONDS reading on the

servo to increase 1.0 (533S) or 12.5 (533A) μsec.

(19) Repeat step 18 but in the negative direction.

C-14 REPLACEABLE PARTS

C-15 The following page lists parts for the OMEGA Option which are replaceable. Reference Designations are indexed also. Paragraphs 7-1 through 7-6 should be consulted for information on the use of parts list and index.

(10) Return the CHANNEL I selector to ON.

(11) Set the LOC OSC switch to -1 KHZ.

(12) Set the receiver's CARRIER LEVEL meter to approximately zero db with the gain control.

(13) Rotate the CHANNEL I selector to OFF.

(14) Adjust R803 in the AGC clamping circuit for CARRIER LEVEL meter drift of less than 2 db per minute in the negative direction.

(15) Return the CHANNEL I selector to ON and switch the receiver's LOC OSC to +1 KHZ.

(16) Again, with the gain control, set the CARRIER LEVEL to approximately zero db.

(17) Turn CHANNEL I selector to OFF and note carefully the CARRIER LEVEL meter drift:

(a) If negative and greater than 2 db/min., make 2½ turns CCW on R808 and repeat steps 10 through 17 until the drift is less than 2 db/min.

(b) If positive, make 2½ turns CW on R808 and repeat steps 10 through 17 until the drift is negative and is less than 2 db/min.

(18) Adjust the RANGE RATE KNOTS CHANNEL I control to +20 (Model 533S) or +250 (Model 533A) and verify it takes about 30 seconds for the MICROSECONDS reading on the

servo to increase 1.0 (533S) or 12.5 (533A) μsec.

(19) Repeat step 18 but in the negative direction.

C-14 REPLACEABLE PARTS

C-15 The following page lists parts for the OMEGA Option which are replaceable. Reference Designations are indexed also. Paragraphs 7-1 through 7-6 should be consulted for information on the use of parts list and index.

ITEM/REFERENCE DESIGNATION INDEX

DATE 03/09/67

ITEM NUMBER	REFERENCE DESIGNATION	T R A C O R STOCK NUMBER	DESCRIPTION	STOCK NUMBER USED ON
			OMEGA CABLE ASSY	6788
1		3392-0011	CONNECTOR LATCH	6788
2		3801-0002	CABLE 6FT LENGTH	6788
3		3819-0026	CONNECTOR PLUG	6788
4		3823-0003	CABLE CLAMP W/BUSHING	6788
			BOARD PC ASSY AGC CLM	599790
10		599785	BOARD PC	599790
9	C 801	8918-0331	CAP 330 MFD 6V	599790
9	C 802	8918-0331	CAP 330 MFD 6V	599790
5	R 801	211-3161	RES 3X16K	599790
4	R 802	211-1783	RES 178K	599790
7	R 803	3579-0103	RES VARIABLE	599790
3	R 804	211-1473	RES 147K	599790
6	R 805	211-4222	RES 42X2K	599790
2	R 806	200-0682	RES 6X8K 1/4W	599790
1	R 807	200-0392	RES 3X9K 1/4W	599790
7	R 808	3579-0103	RES VARIABLE	599790
8	S 1	3641-0003	SWITCH SLIDE 3PDT	599790
			OMEGA OPTION KIT ASSY	599792
1		175-0016	SCR BH 4 40 1/4	599792
2		175-0032	SCR BH 4 40 1/2	599792
2		175-0032	SCR 4 40 1/2	599792
3		617-0256	WASH FL NO 4	599792
3		617-0256	WASH FLT NO 4	599792
4		620-0123	WASH INT LOCK NO 4	599792
4		620-0123	WASH INT LOCK NO 4	599792
5		705-0510	IN GRN AWG 22	599792
6		705-0905	IN WHT/GRN AWG 22	599792
7		706-0010	IN BLK AWG IL	599792
8		706-0110	IN BRN AWG 26	599792
9		706-0310	IN ORN AWG 26	599792
10		706-0410	IN YEL AWG 26	599792
11		706-0510	IN GRN AWG 26	599792
12		706-0610	IN BLU AWG 26	599792
13		706-0810	IN GRY AWG 26	599792
14		706-0902	IN WHT/RED AWG 26	599792
15		706-0908	IN WHT/GRY AWG 26	599792
15		706-0908	IN WHT/GRY AWG 26	599792
16		706-0910	IN WHT AWG 26	599792
16		706-0910	IN WHT AWG 26	599792
18		4720-0012	SPACER NO 4	599792
19		5057-0032	STANDOFF HEX	599792
24		599795	INSTALLATION INSTRUCT	599792
26			NOT USED	599792
23	A 1	599790	BOARD PC ASSY	599792
22	A 2	6788	OMEGA CABLE ASSY	599792
17	J 302	3628-0015	CONNECTOR	599792

LIST OF REPLACEABLE PARTS DATE 03/09/67

TRACOR STOCK NUMBER	DESCRIPTION	MFGR CODE	MANUFACTURER PART NUMBER	TOTAL QUANTITY	U/M
175-0016	SCR BND HD 4 40X1/4L	73734	4022	2.	EA
175-0032	SCR BND HD 4 40X1/2	73734	4026	3.	EA
200-0392	RES FXD COMP 3X9K	01121	RC07GF392K (MIL-R-11/83)	1.	EA
200-0682	RES FXD COMP 6X8K	01121	RC07GF682K (MIL-R-11/93)	1.	EA
211-1473	RES FXD FILM 147K	07115	RN5501473F (MIL-R-10509/78)	1.	EA
211-1783	RES FXD FILM 178K	07115	RN5501783F (MIL-R-10509/78)	1.	EA
211-3161	RES FXD FILM 3X16K	07115	RN5503161F (MIL-R-10509/78)	1.	EA
211-4222	RES FXD FILM 42X2K	96214	RN5504222F (MIL-R-10509/78)	1.	EA
617-0256	WASHER FLAT NO 4	73734	1402	3.	EA
620-0123	WASHER LOCK INT NO 4	73734	1302	5.	EA
705-0510	WIRE 22AWG GRN STRD	70903	8503 GRN (MIL-W-16878)	18.	IN
705-0905	WIRE 22AWG WHT/GRN	70903	8503 WHT/GRN (MIL-W-16878)	24.	IN
706-0010	WIRE 26AWG BLK STRD	70903	8505-BLK (MIL-W-16878)	18.	IN
706-0110	WIRE 26AWG BRN STRD	70903	8505-BRN (MIL-W-16878)	18.	IN
706-0310	WIRE 26AWG ORN STRD	70903	8505-ORN (MIL-W-16878)	18.	IN
706-0410	WIRE 26AWG YEL STRD	70903	8505-YEL (MIL-W-16878)	18.	IN
706-0510	WIRE 26AWG GRN STRD	70903	8505-GRN (MIL-W-16878)	18.	IN
706-0610	WIRE 26AWG BLU STRD	70903	8505-BLU (MIL-W-16878)	18.	IN
706-0810	WIRE 26AWG GRY STRD	70903	8505-GRY (MIL-W-16878)	18.	IN
706-0902	WIRE 26AWG WHT/RED	70903	8505-WHT/RED (MIL-W-16878)	18.	IN
706-0908	WIRE 26AWG WHT/GRY	70903	8505-WHT/GRY (MIL-W-16878)	36.	IN
706-0910	WIRE 26AWG WHT STRD	70903	8505-WHT (MIL-W-16878)	36.	IN
3392-0011	CONN MALE 16 PIN	02660	26-4301-16P	1.	EA
3579-0103	RES VAR WW 10 K	80294	275-1-103	2.	EA
3628-0015	CONNECTOR PCB 15 PIN	71785	50-15A-20 SERIES 250	1.	EA
3641-0003	SWITCH SLIDE 3PDT	79727	G-369	1.	EA
3801-0002	CABLE 20AWG 26/34STRD	70331	1716	1.	EA
3819-0026	CONN MS TYPE	02660	MS3106A-14S-6S	1.	EA
3823-0003	CLAMP CABLE W/BUSHING	02660	MS3057-6A	1.	EA
4720-0012	SPACER RD AL 3/16L	06540	9208-A-115-18	1.	EA
5057-0032	STANDOFF HEX 4-40X1/2	83330	2332	2.	EA
6788	OMEGA CABLE ASSY	19397	6738	1.	EA
8918-0331	CAP FXD TA 330 MFD	05397	CS13BB337K (MIL-C-26655/2D)	2.	EA
599785	BOARD PRINTED CKT	19397	599785	1.	EA
599790	BOARD PC AGC ASSY	19397	599790	1.	EA
599795	INSTALLATION INSTRUCT	19397	599795	2.	EA

C-16 SCHEMATIC DIAGRAM AND ASSEMBLY DRAWINGS

Title	Drawing No.	Page No.
AGC Clamping P.C. Board, Assembly Drawing	599790	C-11
AGC Clamping Board, Schematic Drawing	599789	C-11
OMEGA Cable Assembly	6788	C-13

APPENDIX D

REFERENCES

Following is a list of publications available to 599J operator and maintenance personnel.

DA Pam 310-4	Index of Technical Manuals, Technical Bulletins, Supply Manuals (types 7, 8, and 9), Supply Bulletins and Lubrication Orders.
DA Pam 310-7	U. S. Army Equipment Index of Modification Work Orders.
TM 38-750	The Army Maintenance Management System (TAMMS).
SB 38-100	Preservation, Packaging, Packing, and Marking Materials, Supplies, and Equipment used by the Army.
TB 746-10	Field Instruction for Painting and Preserving Electronics Command Equipment
TB 750-236	Calibration Requirements for the Maintenance of Army Materiel.

APPENDIX E

BASIC ISSUE ITEMS LIST AND ITEMS TROOP INSTALLED OR AUTHORIZED LIST

Effective Date: 1 July 1973

Section I. INTRODUCTION

Scope

This appendix lists items which accompany the VLF/LF Tracking Receiver, Tracor Model 599J or are required for installation, operation, or maintenance.

General

This Basic Issue Items List is divided into the following sections:

a. Basic Issue Items - Section II. A list of items which accompany VLF/LF Tracking Receiving, Tracor, Model 599J and are required by the operator/crew for installation, operation, or maintenance.

b. Items Troop Installed or Authorized List - Section III. Not applicable.

c. Maintenance and Operating Supplies - Section IV. Not applicable.

By Order of the Secretary of the Army:

BRUCE PALMER, JR.
General, United States Army
Acting Chief of Staff

Official:

VERNE L. BOWERS
Major General, United States Army
The Adjutant General

Distribution:

To be distributed in accordance with DA Form 12-34, Section II (qty rqr block No. 75) requirements for Calibration Procedures Publications.

☆U.S. GOVERNMENT PRINTING OFFICE: 1994 - 533-072/00181

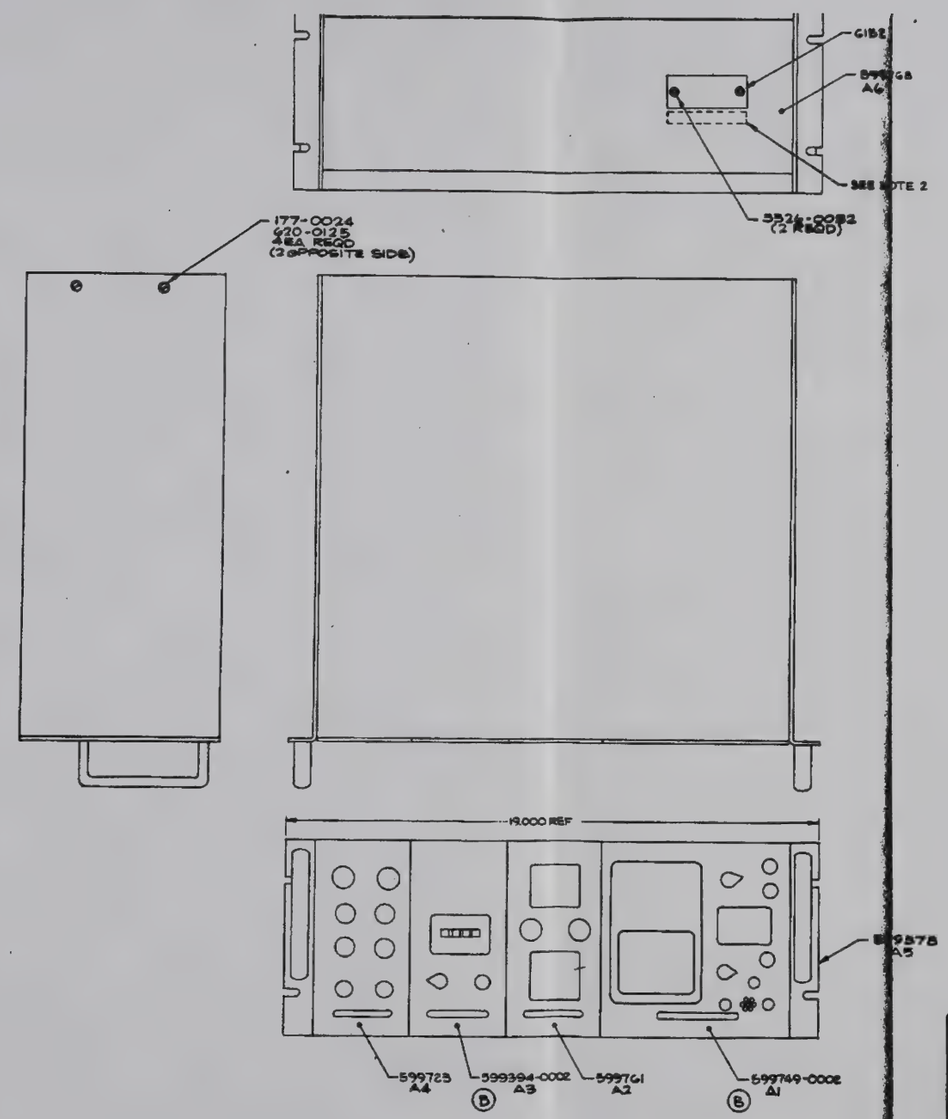

NOTES:
1. FOR A COMPLETE LIST OF MATERIALS, SEE SEPARATE PL.
2. RUBBER STAMP "PATENTS PENDING" IN AREA INDICATED.
3. IDENTIFY ASSY AS TEACOR STK NO. 599763 AND REV LTR OF ASSOCIATED PL.

1

1 VLF/LF Tracking Receiver
Model 599J, Assembly Drawing
599763 Rev B

599848B 8-5/8-6

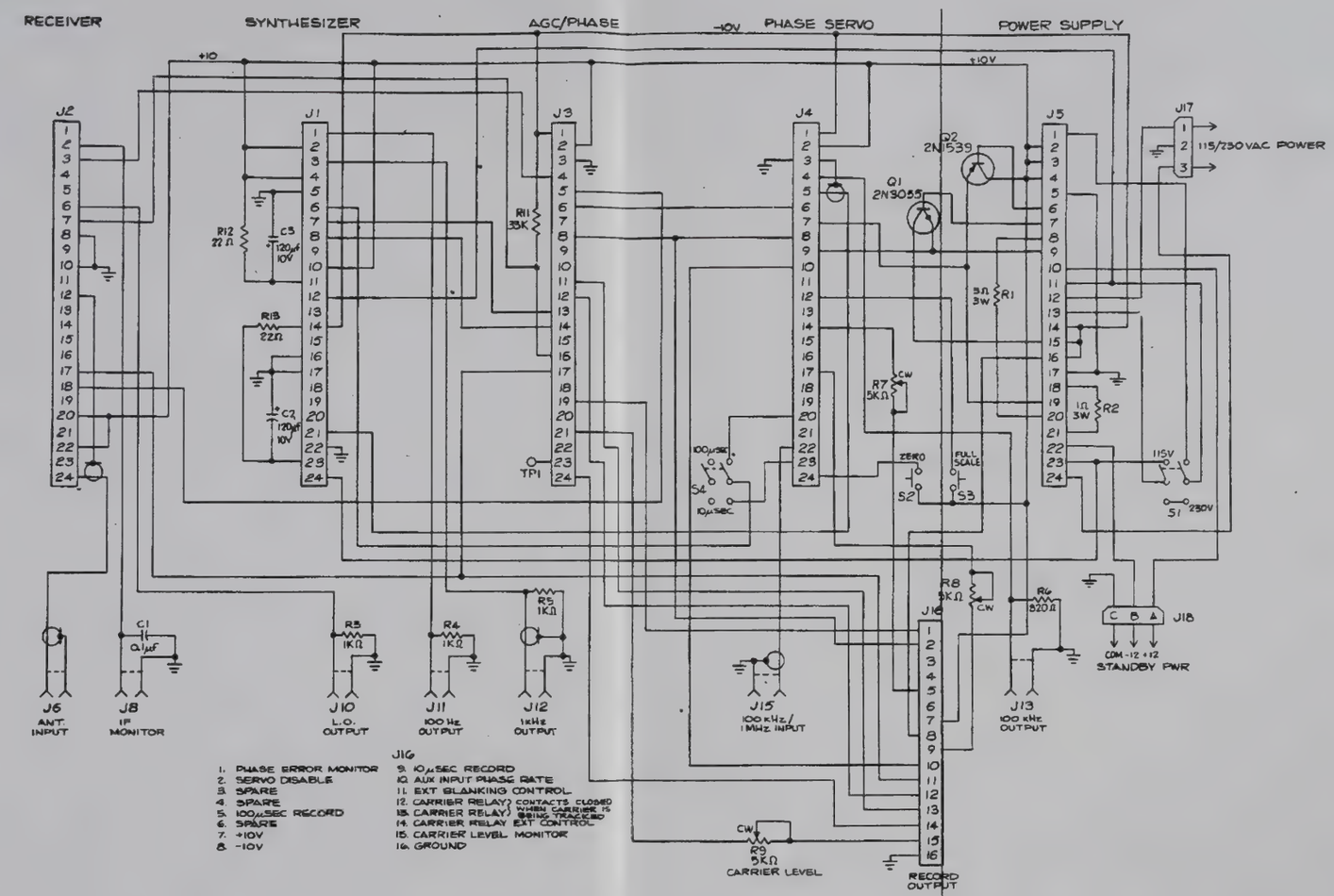

NOTES:
1. LAST USED REFERENCE DESIGNATORS ARE J18, S4, C3, R13, TP1 AND Q2.

2

1 Connector Panel Assembly, Assembly Drawing 599768 Rev A

2 Connector Panel Assembly, Schematic Diagram 599769 Rev -

599848B 8-7/8-8

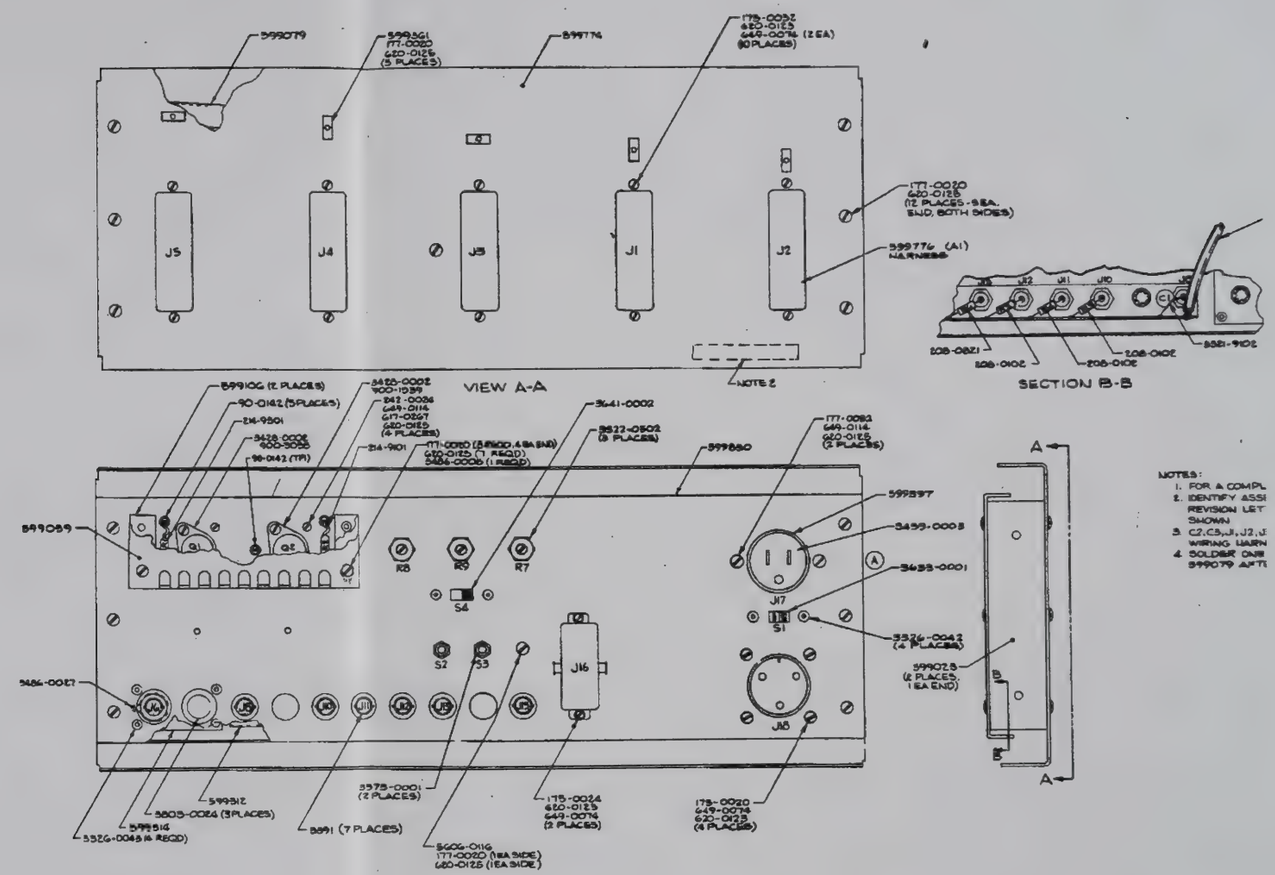

599079
599361
177-0020
620-0125
(5 PLACES)
599774
175-0032
620-0125
649-0074 (2 EA)
(10 PLACES)
177-0020
620-0125
(12 PLACES - 5 EA. END, BOTH SIDES)
599776 (A1)
HARNESS
J5
J4
J3
J1
J2
NOTE 2
VIEW A-A
SECTION B-B
208-0821
208-0102
208-0102
208-0102
3521-9102
599106 (2 PLACES)
90-0142 (5 PLACES)
214-9501
3428-0002
900-3055
90-0142 (TP)
3428-0002
900-1539
242-0024
649-0114
617-0267
620-0125
(4 PLACES)
214-9101
177-0020 (3 REQD, 4 EA END)
620-0125 (7 REQD)
3486-0006 (1 REQD)
3641-0002
3522-0502
(3 PLACES)
599880
177-0032
649-0114
620-0125
(2 PLACES)
599397
3459-0003
3633-0001
3526-0042
(4 PLACES)
599023
(2 PLACES, 1 EA END)
599059
Q1
Q2
R8
R9
R7
S4
S2
S3
J16
J17
S1
J18
3486-0027
3575-0001
(2 PLACES)
175-0024
620-0125
649-0074
(2 PLACES)
175-0020
649-0074
620-0125
(4 PLACES)
599312
3803-0024 (3 PLACES)
599314
3526-0043 (4 REQD)
3891 (7 PLACES)
5606-0116
177-0020 (1 EA SIDE)
620-0125 (1 EA SIDE)
A
B
NOTES:
1. FOR A COMPL
2. IDENTIFY ASSI
REVISION LET
SHOWN
3. C2, C3, J1, J2, J
WIRING HARN
4. SOLDER ONE
599079 AFTE

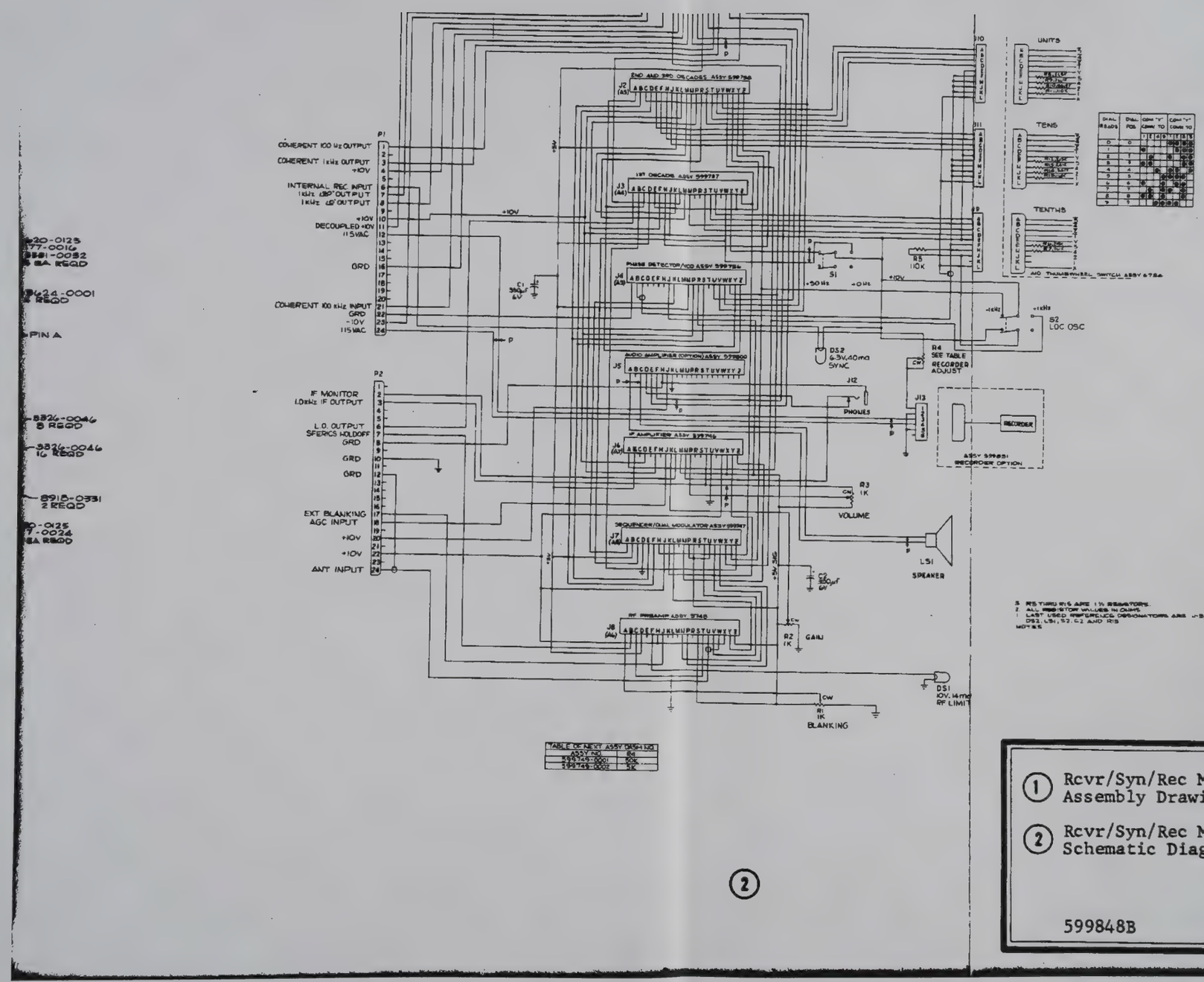

TABLE OF NEXT ASSY DASH NO	
ASSY NO	84
599749-0001	50K
599749-0002	5K

3. R5 THRU R15 ARE 1% RESISTORS.
2. ALL RESISTOR VALUES IN OHMS.
1. LAST USED REFERENCE DESIGNATORS ARE J13, P2, DS2, LS1, S2, C2 AND R15
NOTES

(1) Rcvr/Syn/Rec Model 599-204, Assembly Drawing 599749 Rev

(2) Rcvr/Syn/Rec Model 599-204, Schematic Diagram 599750 Rev

599848B 8-9/8-1

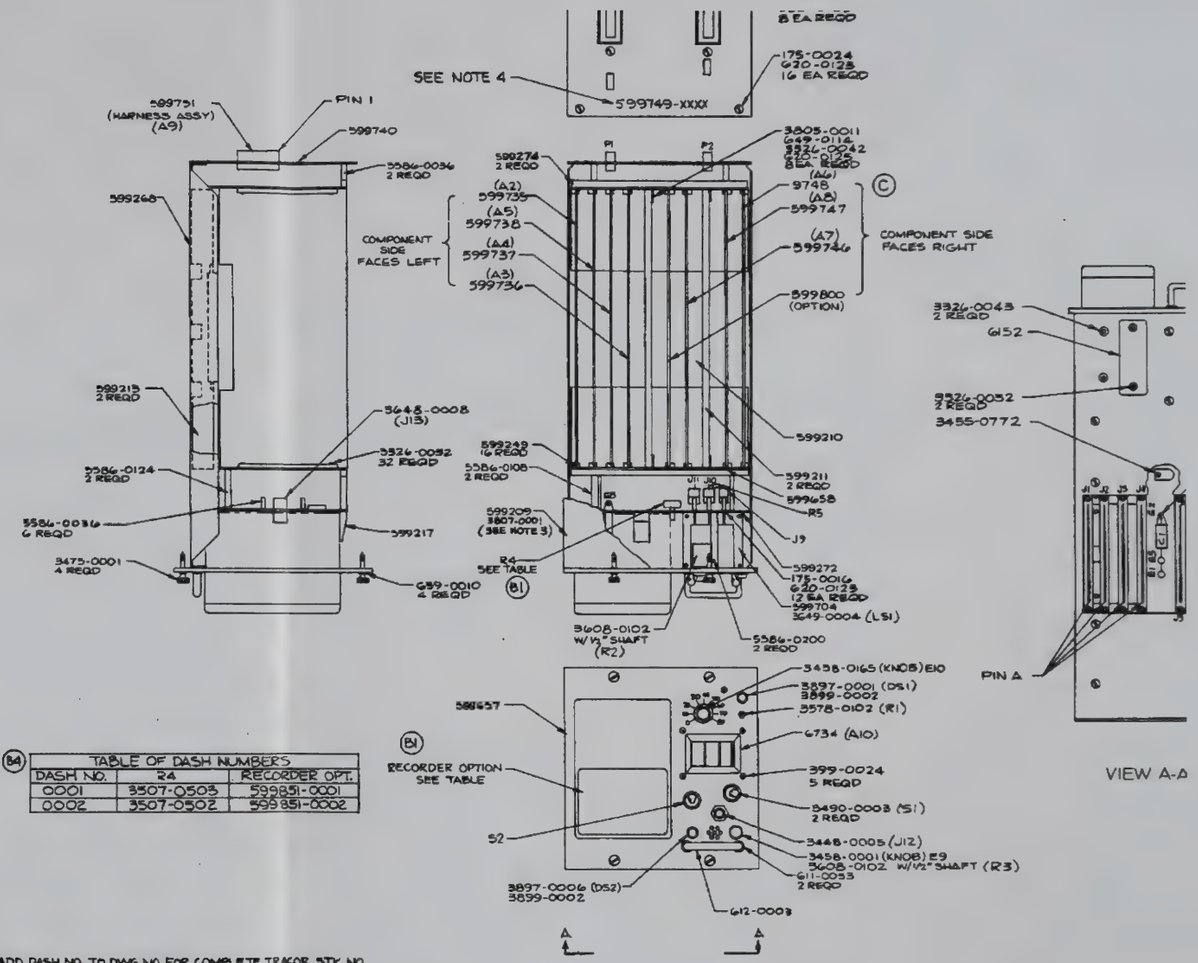

TABLE OF DASH NUMBERS		
DASH NO.	24	RECORDER OPT.
0001	3507-0503	599851-0001
0002	3507-0502	599851-0002

NOTES:

2. J1, J2, J3, J4, J5, J6, J7, J8, J9, J10, J11, P1, P2 AND R5 ARE PART OF A9, HARNESS ASSY 599751.
3. SEE SEPARATE PL FOR COMPLETE LIST OF MATERIALS.
4. IDENTIFY ASSY AS TEACOR STK NO. 599749* AND REV LTR OF ASSOCIATED PL IN LOCATION SHOW
5. ADD TWO EACH RUBBER STRIP, PART NO. 3807-0001, INSIDE COVER, PART NO 599209; EACH STRIP IS TO BE 6.250 ±.125 INCHES LONG AND LOCATED 4.000±.500 INCHES FROM EACH END OF COVER AND PARALLEL WITH THE EDGE.
6. * ADD DASH NO. TO DWG NO. FOR COMPLETE TEACOR STK NO.

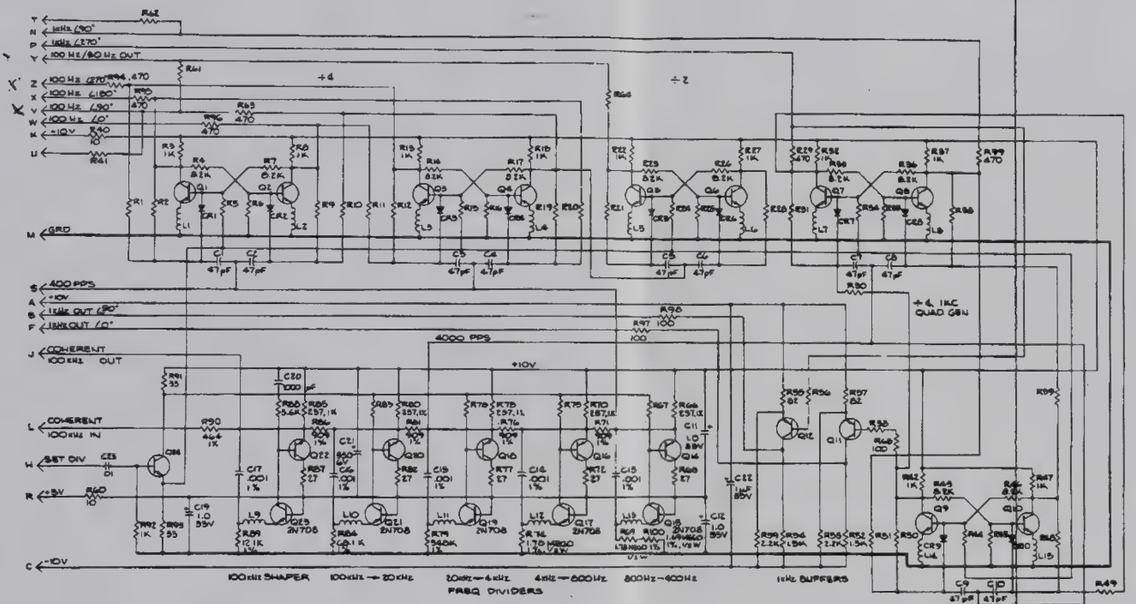

NOTES:

1. ALL NPN TRANSISTORS ARE 2N5646 UNLESS OTHERWISE NOTED.
2. ALL PNP TRANSISTORS ARE 2N5702.
3. ALL DIODES ARE 1N914.
4. ALL RESISTORS ARE 10K, ½W, 10% UNLESS OTHERWISE NOTED. RESISTANCES ARE IN OHMS.
5. ALL CAPACITANCES IN MICROFARADS UNLESS OTHERWISE NOTED.
6. ALL INDUCTORS ARE BEAD TYPE.
7. LAST USED REFERENCE DESIGNATORS: R100, C29, Q24, CR10, L15.

(1) Reference Divider P.C. Board, Assembly Drawing 599735 Rev

(2) Reference Divider, Schematic Diagram 599708 Rev

599848B 8-11/8-1

(2)

7

3. TRANSISTOR INSULATORS USED ONLY ON TRANSISTORS HAVING INDUCTOR BEADS
2. FOR A COMPLETE LIST OF PARTS AND MATERIALS SEE PL 599735
1. IDENTIFY ASSY AS TRACOR STK NO 599735 AND REVISION LETTER OF ASSOCIATED PL IN LOCATION SHOWN.

NOTES:

1

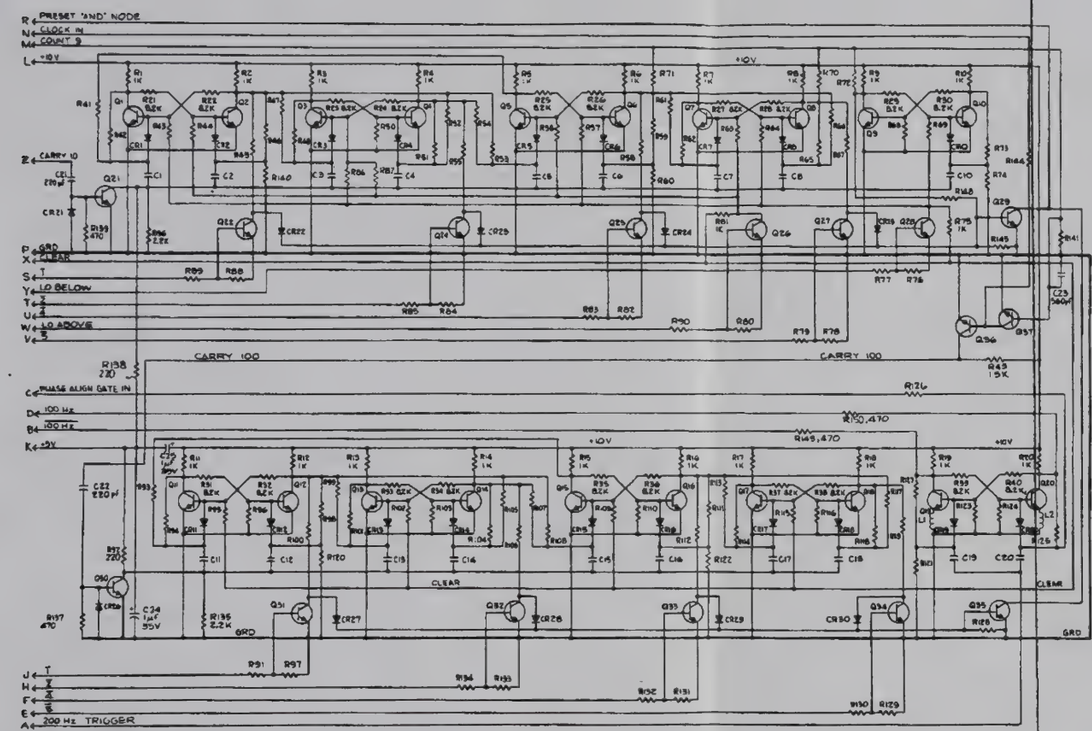

NOTES:

1) UNLESS OTHERWISE SPECIFIED, ALL RESISTORS ARE 10K, ¼W, 10% COMPOSITION. ALL TRANSISTORS ARE 2N3646, ALL DIODES ARE 1N914, AND ALL CAPACITORS ARE 47 pf.
2) LAST USED REFERENCE DESIGNATORS ARE Q37, R150, CR30, C24 & L2
3) L1 AND L2 ARE BEAD TYPE INDUCTORS
4) RESISTOR VALUES ARE IN OHMS

(1) Second and Third Decades
P.C. Board,
Assembly Drawing 599738 Rev -

(2) Second and Third Decades,
Schematic Diagram 599711 Rev -

599848B 8-13/8-14

(2)

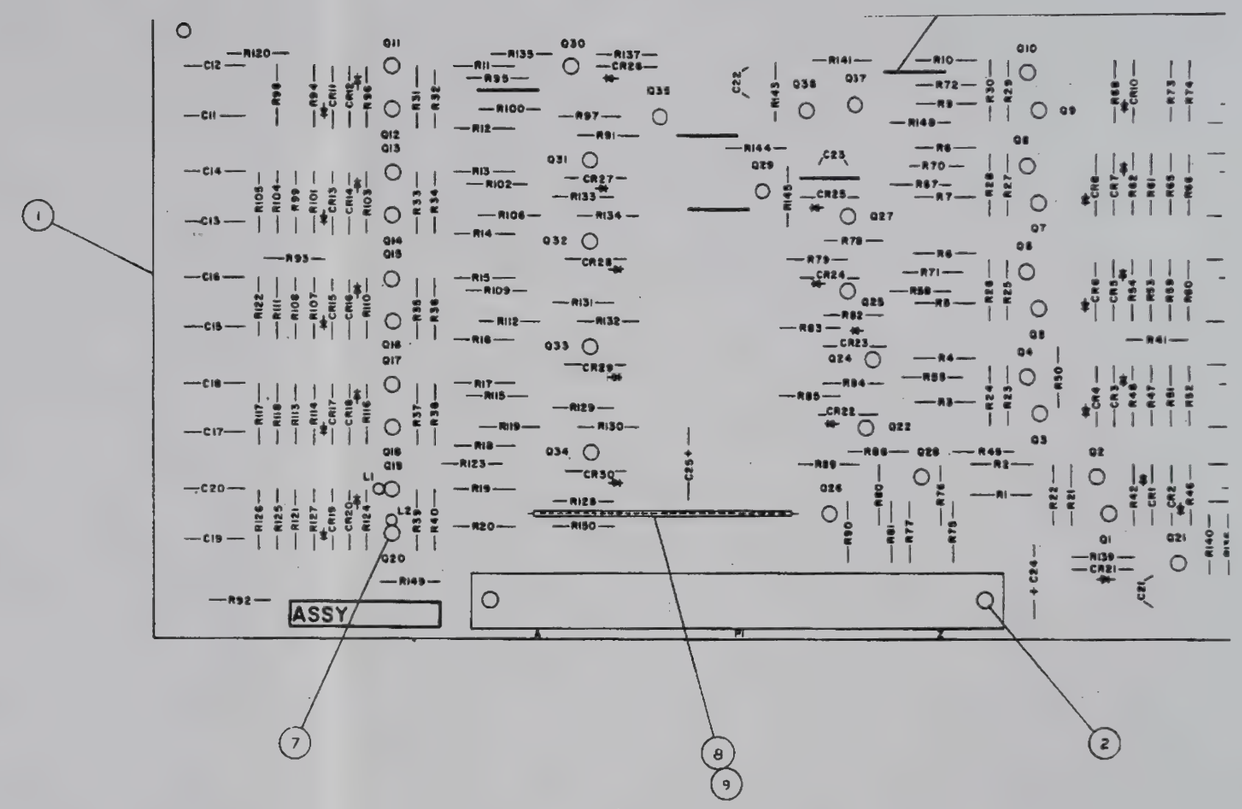

3. TRANSISTOR INSULATORS USED ONLY ON Q19 AND Q20
2. FOR A COMPLETE LIST OF PARTS AND MATERIALS SEE PL 599738
1. IDENTIFY ASSY AS TRACOR STK NO 599738 AND REVISION LETTER OF ASSOCIATED PL IN LOCATION SHOWN.

NOTE:

1

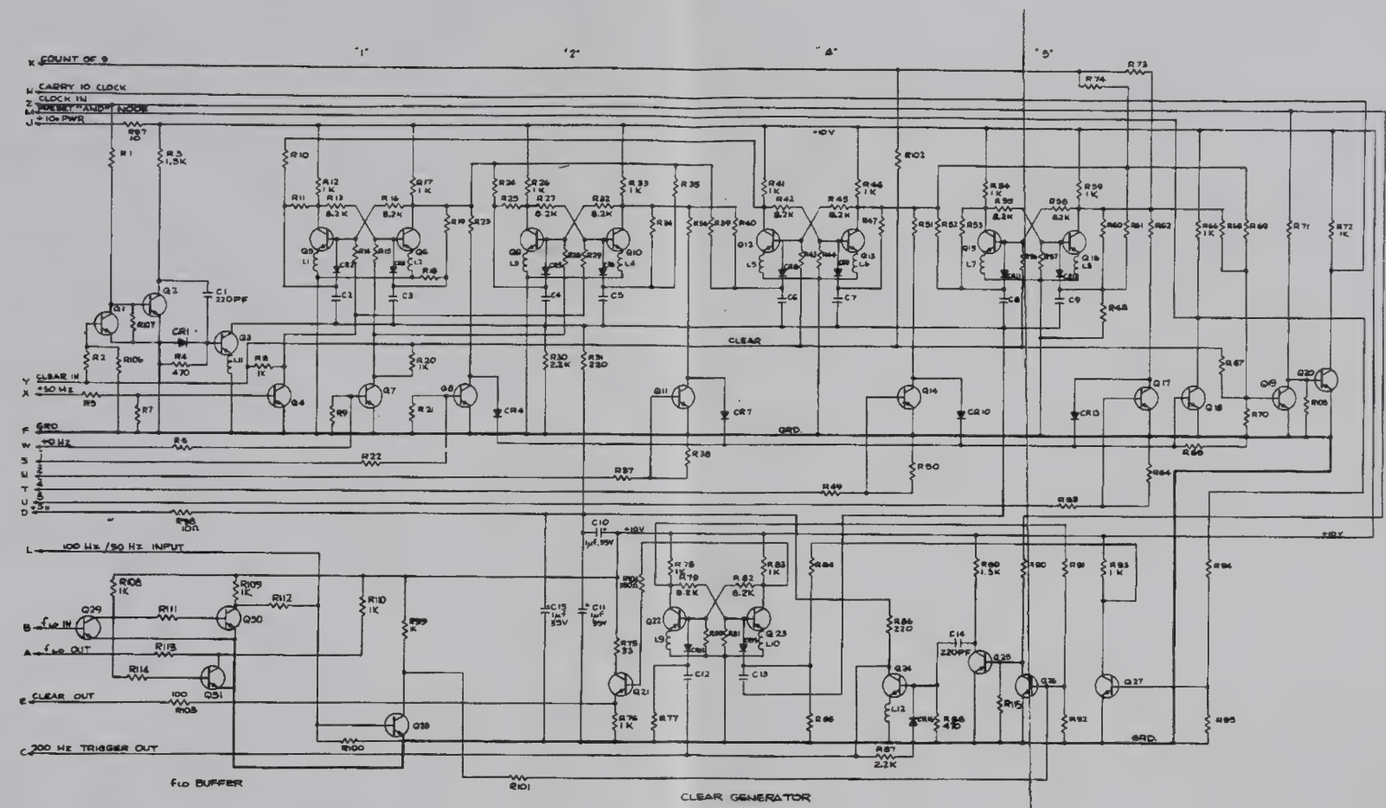

NOTES:
1. ALL CAPACITORS ARE 47PF UNLESS OTHERWISE SPECIFIED.
2. ALL DIODES ARE 1N914.
3. ALL RESISTORS ARE 10K, ¼W, 10% WITH VALUES IN OHMS UNLESS OTHERWISE SPECIFIED.
4. ALL TRANSISTORS ARE 2N3646.
5. LAST USED REF DESIGS ARE C15, CR16, Q51, R115 & L12
6. ALL INDUCTORS ARE BEAD TYPE.

(1) First Decade P.C. Board, Assembly Drawing 599737 Rev -

(2) First Decade, Schematic Diagram 599710 Rev -

599848B 8-15/8-16

(2)

NOTES:
1. IDENTIFY ASSY AS TRACOR STK. NO. 599737 AND REVISION LETTER OF ASSOCIATED PL IN LOCATION SHOWN.
2. FOR A COMPLETE LIST OF PARTS AND MATERIALS SEE PL 599737.
3. TRANSISTOR INSULATORS USED ONLY ON TRANSISTORS HAVING INDUCTOR BEADS.

1

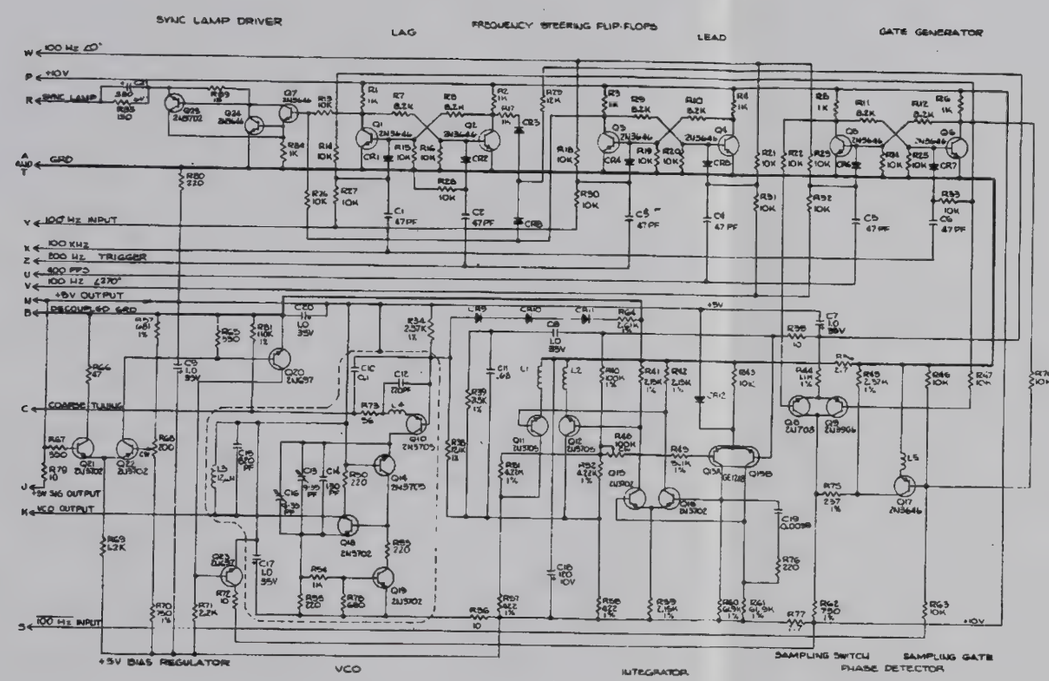

NOTES:
1. ALL DIODES ARE 1N914.
2. LAST REFERENCE DESIGNATORS USED ARE C21, CR12, Q25, R84 AND L8.
3. UNLESS OTHERWISE SPECIFIED, ALL RESISTORS ARE ¼W, ±10% AND VALUES ARE IN OHMS.
4. L1, L2, L4, L5 ARE BEAD TYPE INDUCTORS.
5. ALL CAPACITOR VALUES ARE MICROFARADS UNLESS OTHERWISE NOTED.

(2)

(1) Phase Detector/VCO P.C. Board, Assembly Drawing 599736 Rev -

(2) Phase Detector/VCO, Schematic Diagram 599709 Rev -

599848B 8-17/8-18

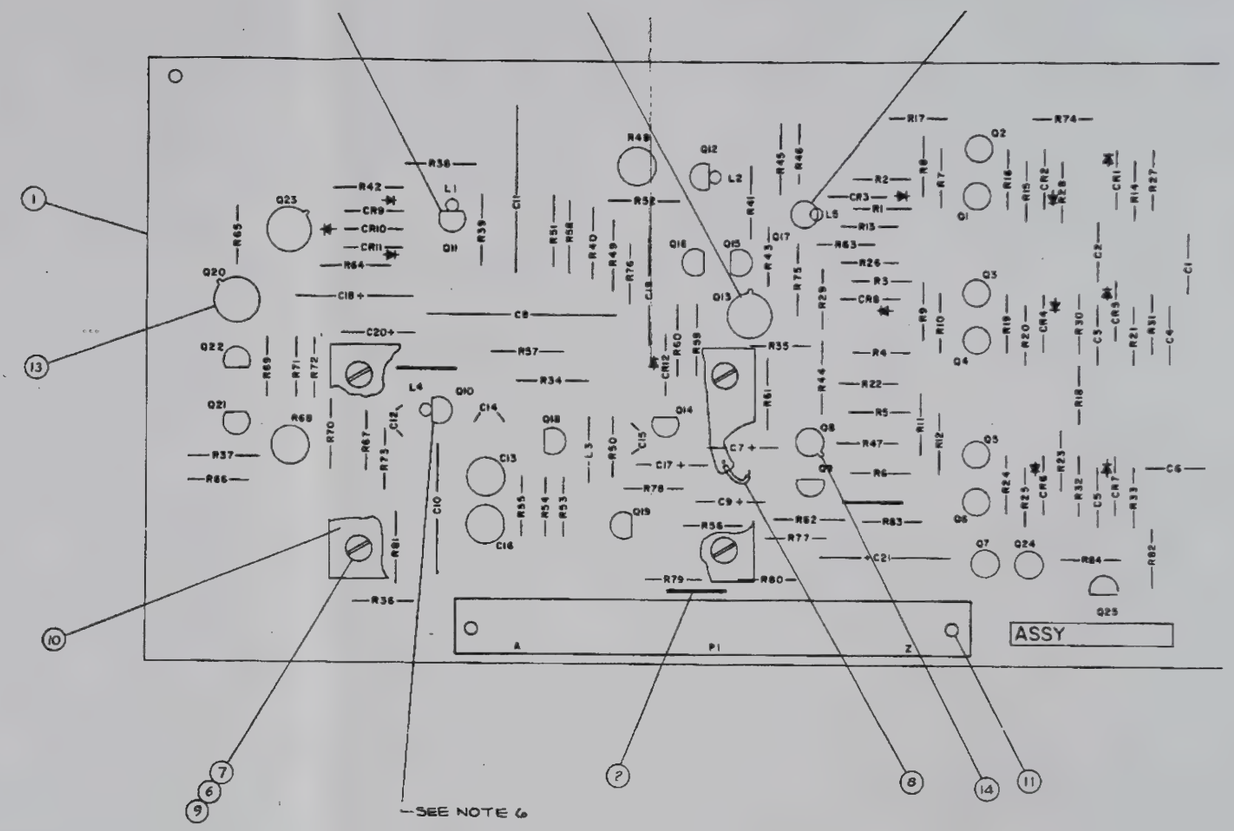

6. LAY Q10 OVER TO RIGHT SO THAT RIGHT EDGE OF PAD TOUCHES BOARD.
5. TAB ON Q13 IS BETWEEN COLLECTORS DO NOT ATTEMPT TO FORCE TRANSISTOR CAN DOWN AGAINST BOARD. LEAVE APPROXIMATELY $\frac{3}{8}$ INCH SPACE BETWEEN BOARD AND BOTTOM OF CAN.
4. YELLOW WIRE, ITEM FIND LO.8, SHALL BE LAP SOLDERED $\frac{1}{2}$ IN. MIN FROM ANY EDGE OF SHIELD
3. TRANSISTOR INSULATORS USED ONLY ON TRANSISTORS HAVING INDUCTOR BEADS OR METAL CANS
2. FOR A COMPLETE LIST OF PARTS AND MATERIALS SEE PL 599736
1. IDENTIFY ASSY AS TRACOR STOCK NO. 599736 AND REVISION LETTER OF ASSOCIATED PL IN LOCATION SHOWN

NOTE:

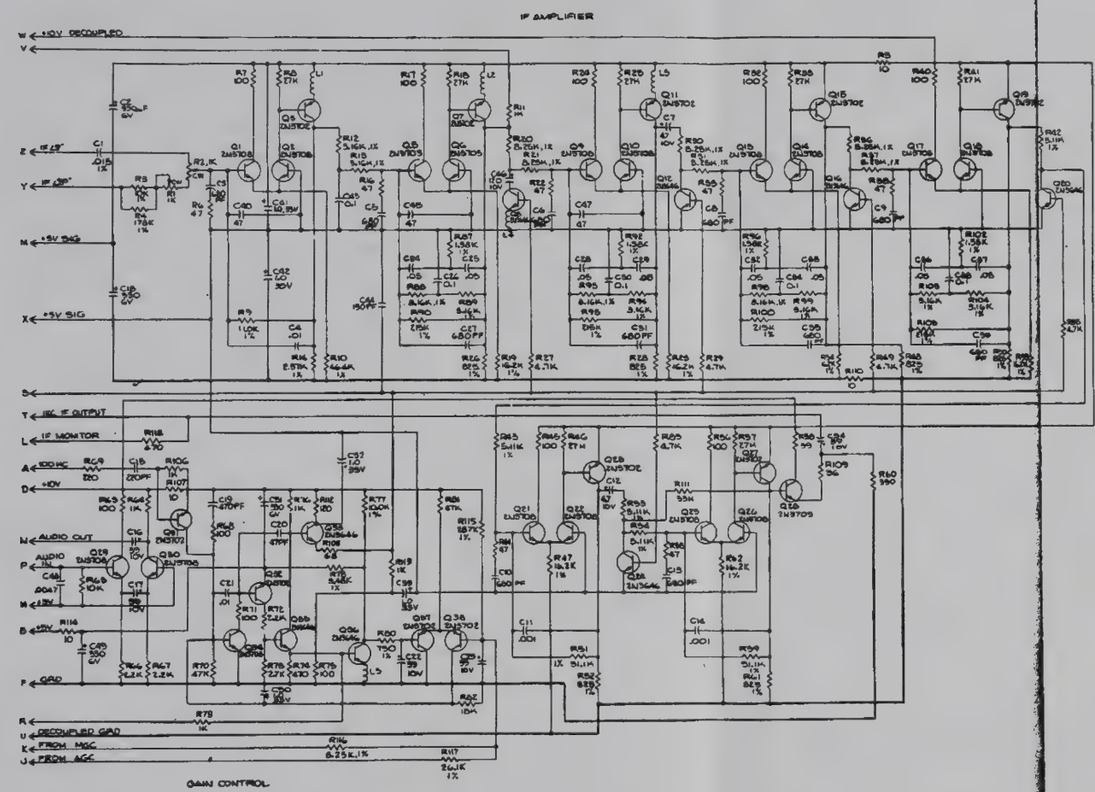

NOTES:
1. ALL CAPACITOR VALUES IN MICROFARADS UNLESS OTHERWISE NOTED.
2. ALL INDUCTORS ARE BEAD TYPE.
3. LAST USED REFERENCE DESIGNATORS ARE: Q37, R113, C54 AND L5.
4. ALL RESISTORS ARE 10% WITH VALUES IN OHMS UNLESS OTHERWISE NOTED.

(1) IF Amplifier P.C. Board, Assembly Drawing 599746 Rev -

(2) IF Amplifier, Schematic Diagram 599706 Rev -

599848B 8-19/8-20

(2)

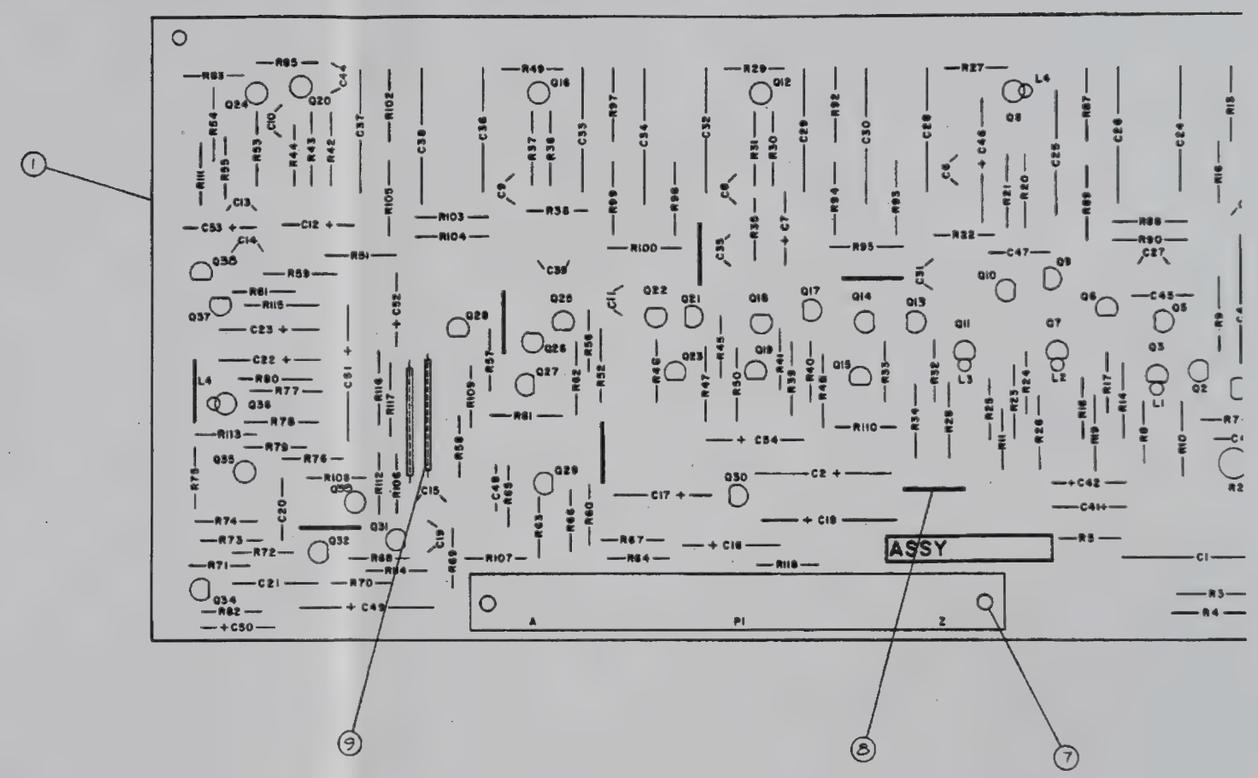

3. TRANSISTOR INSULATORS USED ONLY ON TRANSISTORS HAVING INDUCTOR BEADS.
2. FOR A COMPLETE LIST OF PARTS AND MATERIALS SEE PL 599746.
1. IDENTIFY ASSY AS TRACOR STOCK NO. 599746 AND REVISION LETTER OF ASSOCIATED PL IN LOCATION SHOWN

NOTE:

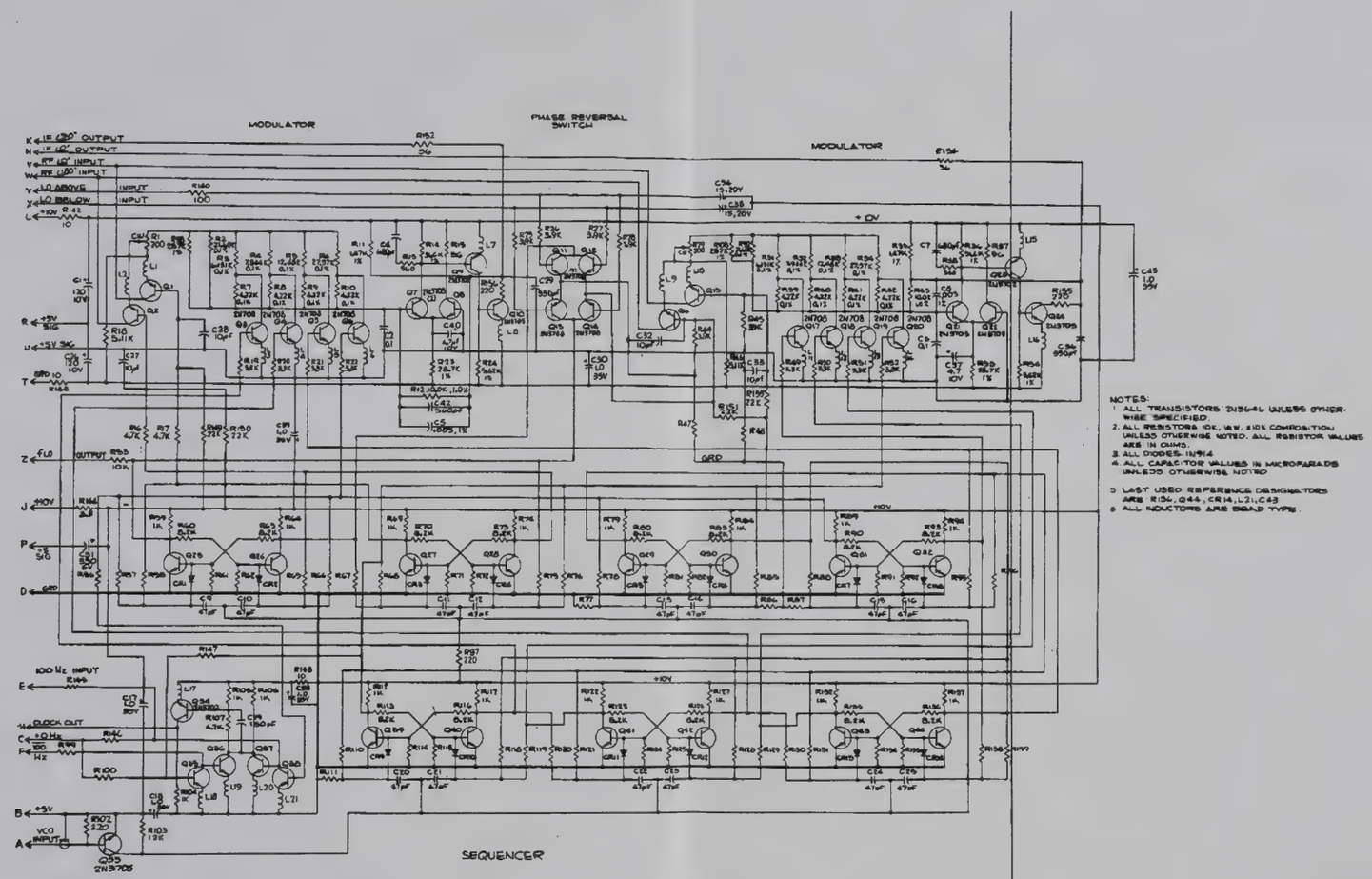

NOTES:
1. ALL TRANSISTORS 2N3646 UNLESS OTHERWISE SPECIFIED.
2. ALL RESISTORS 10K, 1W, ±10% COMPOSITION UNLESS OTHERWISE NOTED. ALL RESISTOR VALUES ARE IN OHMS.
3. ALL DIODES 1N914
4. ALL CAPACITOR VALUES IN MICROFARADS UNLESS OTHERWISE NOTED
5. LAST USED REFERENCE DESIGNATORS ARE R134, Q44, CR14, L21, C43
6. ALL INDUCTORS ARE BEAD TYPE.

(1) Sequencer/Dual Modulator P.C. Board, Assembly Drawing 599747 Rev -

(2) Sequencer/Dual Modulator, Schematic Diagram 599707 Rev -

599848B 8-21/8-22

(2)

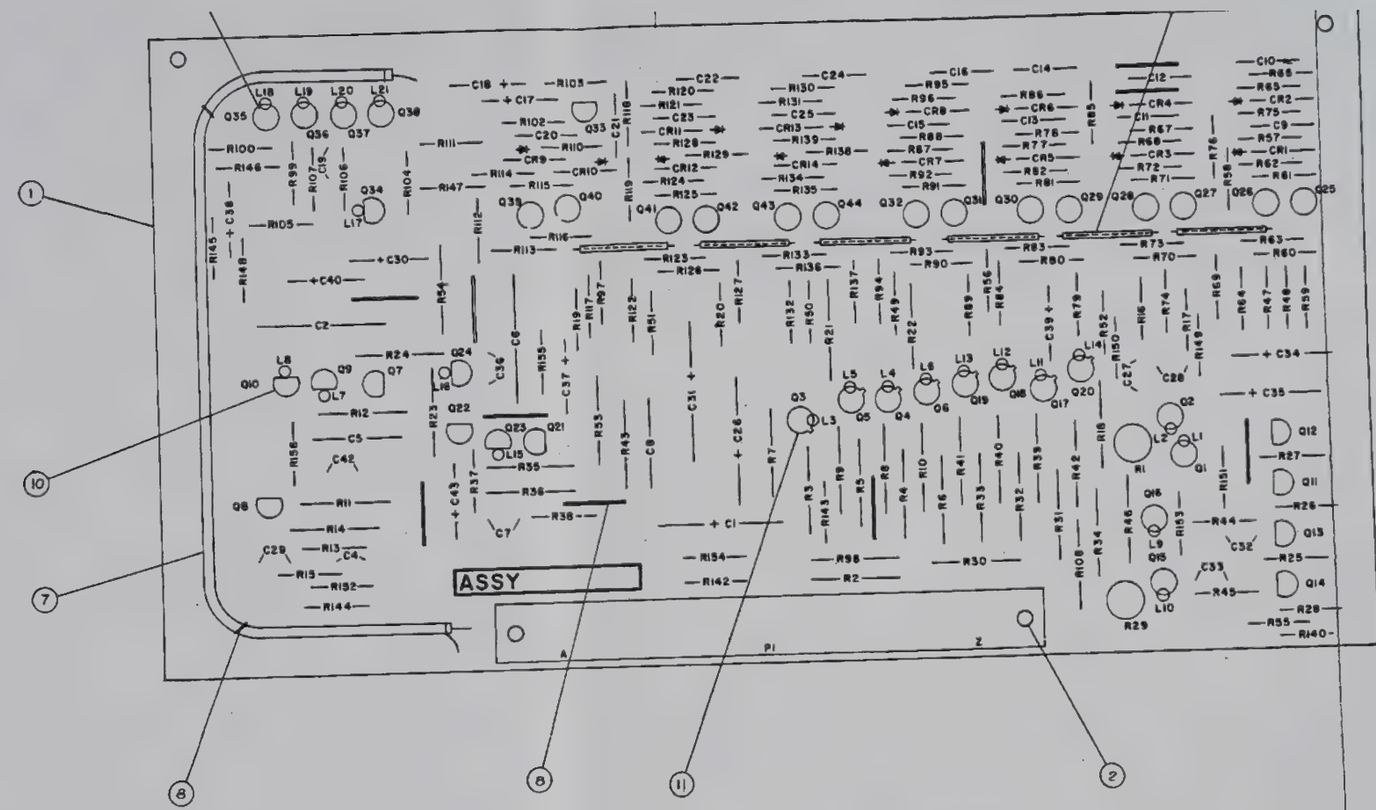

3. TRANSISTOR INSULATORS USED ONLY ON TRANSISTORS HAVING INDUCTOR BEADS
2. FOR A COMPLETE LIST OF PARTS AND MATERIALS SEE PL 599747
1. IDENTIFY ASSY AS TRACOR STOCK NO. 599747 AND REVISION LETTER OF ASSOCIATED PL IN LOCATION SHOWN

NOTE:

1

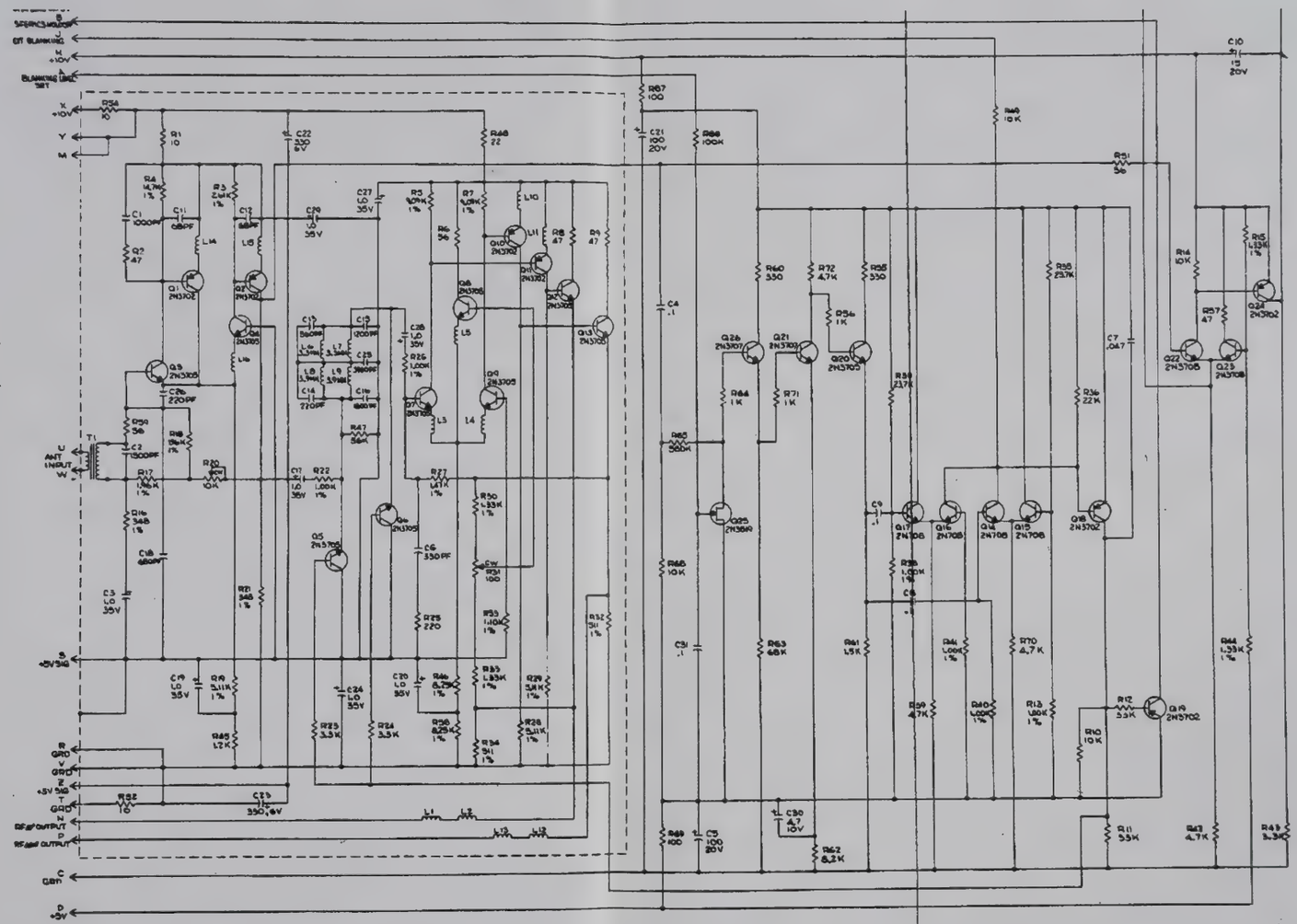

NOTES:
1. ALL RESISTORS ARE ½W, ±10%, WITH VALUES IN OHMS, UNLESS OTHERWISE SPECIFIED.
2. ALL CAPACITOR VALUES ARE IN MICROFARADS UNLESS OTHERWISE NOTED.
3. LAST USED REFERENCE DESIGNATORS ARE Q26, C30, R72, L15 AND T1.
4. ALL INDUCTORS WITHOUT VALUES ARE BEAD TYPE.

(1) RF Preamp/Blanking P.C. Board, Assembly Drawing 9748 Rev -

(2) RF Preamp/Blanking, Schematic Diagram 9747 Rev -

599848B 8-23/8-24

(2)

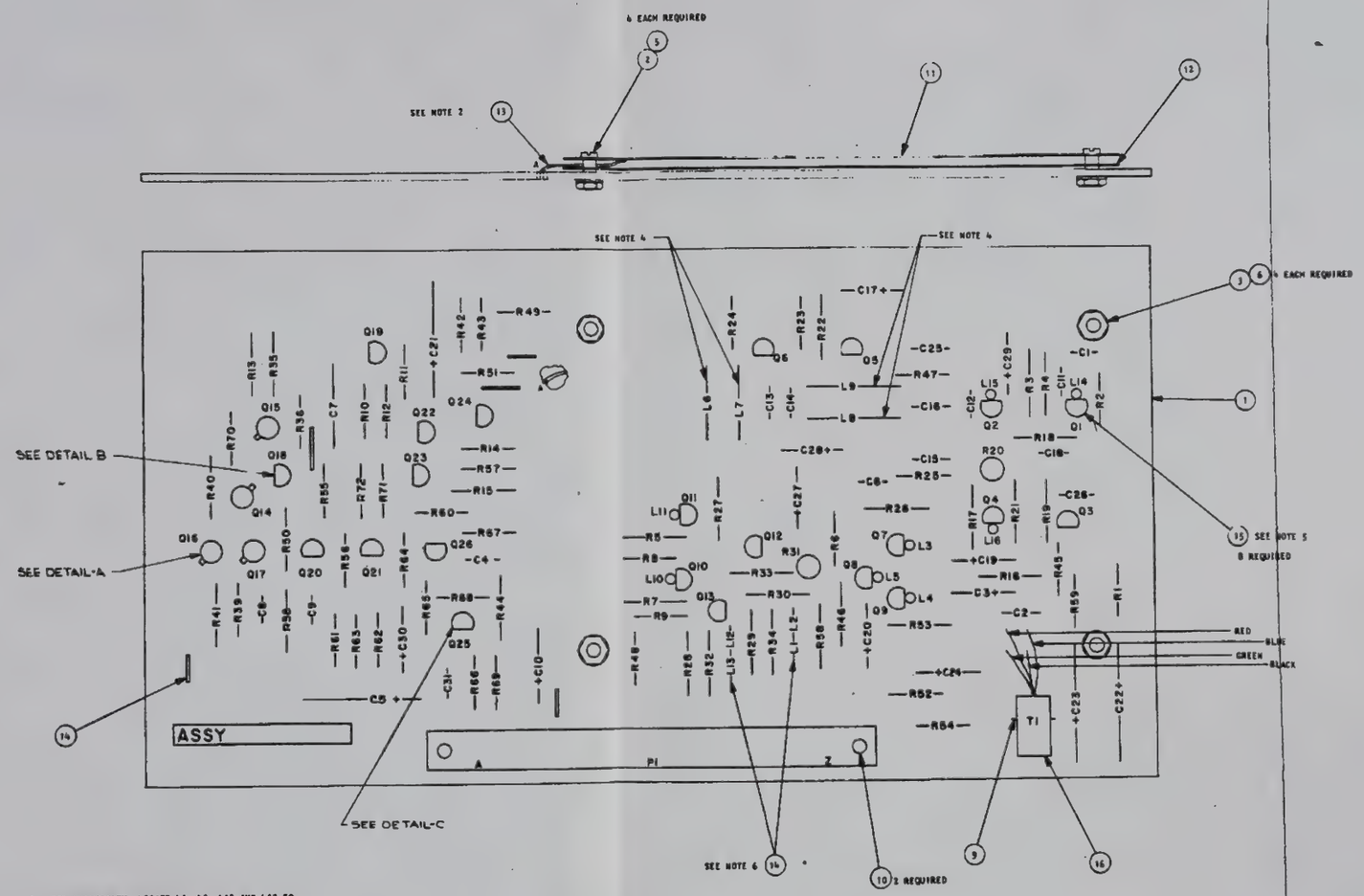

6. FOR UNIFORMITY LOCATE L1, L2, L12 AND L13 SO THAT THE CENTER HOLE OF EACH LINES UP WITH AN ENTRANCE HOLE FOR ITEM 14.
5. TRANSISTOR INSULATORS USED ONLY ON TRANSISTORS HAVING INDUCTOR BEADS
4. PRESS TOGETHER L6 AND L7, ALSO L8, AND L9 AFTER ASSY SO THAT INDUCTORS TOUCH IF POSSIBLE
3. FOR A COMPLETE LIST OF PARTS AND MATERIALS SEE PL 9768
2. YELLOW WIRE, ITEM 13, SHALL BE CONNECTED FROM HOLE DESIGNATED "A" ON PCB TO SHIELD AND SHALL BE SOLDERED A MINIMUM OF 1/2 INCH FROM ANY EDGE ON SHIELD
1. IDENTIFY ASSY AS TRACOR STK NO. 9768 AND REVISION LETTER OF ASSOCIATED PL IN LOCATION SHOWN

NOTES:

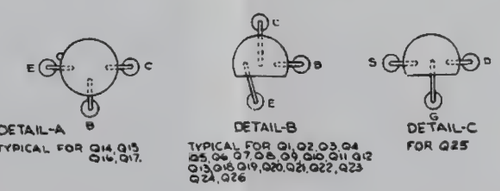

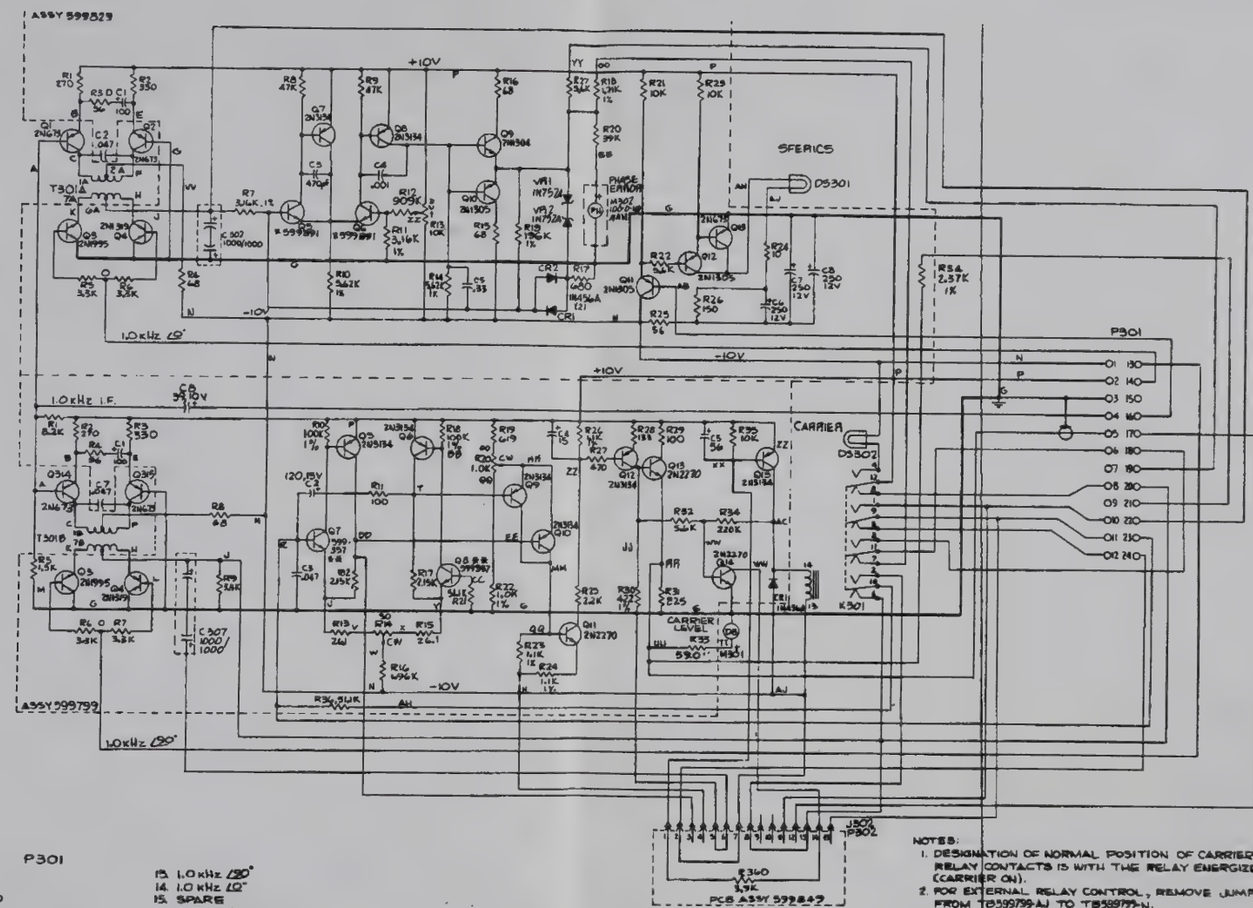

P301

1. -10V
2. +10V
3. GROUND
4. 1kHz IF
5. AGC
6. SERVO DRIVE
7. SPARE
8. SERVO DISABLE
9. SPARE
10. SPARE RELAY CONTACT
11. SPARE RELAY CONTACT
12. SPARE RELAY CONTACT
13. 1.0 kHz ∠90°
14. 1.0 kHz ∠0°
15. SPARE
16. SFERICS
17. EXT BLANKING
18. SPARE RELAY CONTACT
19. PHASE ERROR MONITOR
20. CARRIER LEVEL MONITOR
21. CARRIER LEVEL OUTPUT
22. FACTORY TEST POINT
23. FACTORY TEST POINT
24. RELAY CONTROL (SEE NOTE 2)

NOTES:

1. DESIGNATION OF NORMAL POSITION OF CARRIER RELAY CONTACTS IS WITH THE RELAY ENERGIZED (CARRIER ON).
2. FOR EXTERNAL RELAY CONTROL, REMOVE JUMPER FROM TB599799-AJ TO TB599799-N.
3. LEGEND
   - * MATCHED PAIR
   - ** MATCHED PAIR
4. UNLESS OTHERWISE INDICATED ALL RESISTANCE VALUES ARE IN OHMS (M=1000), ALL CAPACITANCE VALUES ARE IN MICROFARADS.

(1) AGC/Phase Module Model 599-
Assembly Drawing 599761 Re

(2) AGC/Phase Module Model 599-
Schematic Diagram 599771 Re

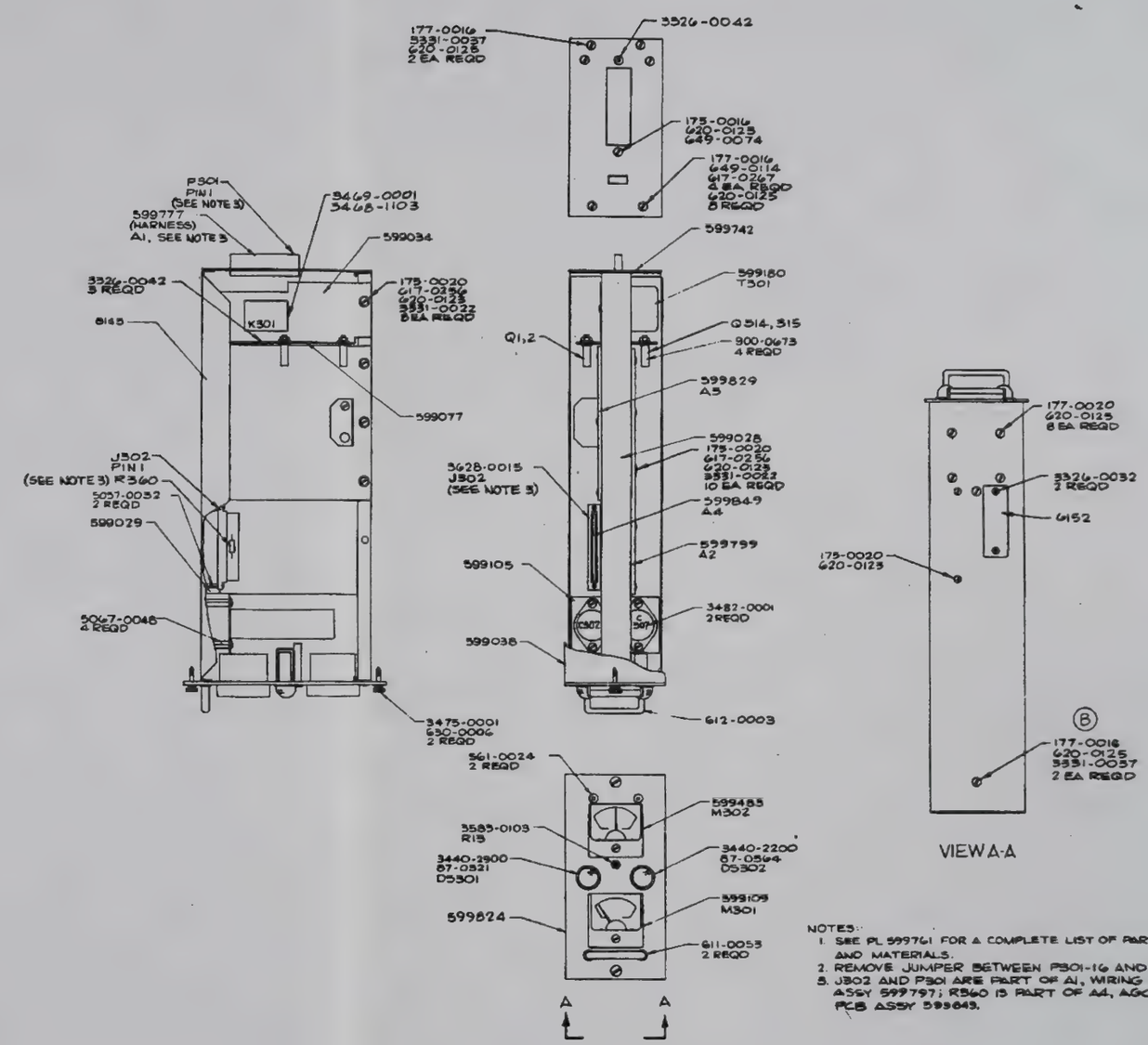

NOTES:
1. SEE PL 599761 FOR A COMPLETE LIST OF PARTS AND MATERIALS.
2. REMOVE JUMPER BETWEEN P301-16 AND P301-1
3. J302 AND P301 ARE PART OF A1, WIRING HARNESS ASSY 599797; R360 IS PART OF A4, AGC JUMPER PCB ASSY 599849.

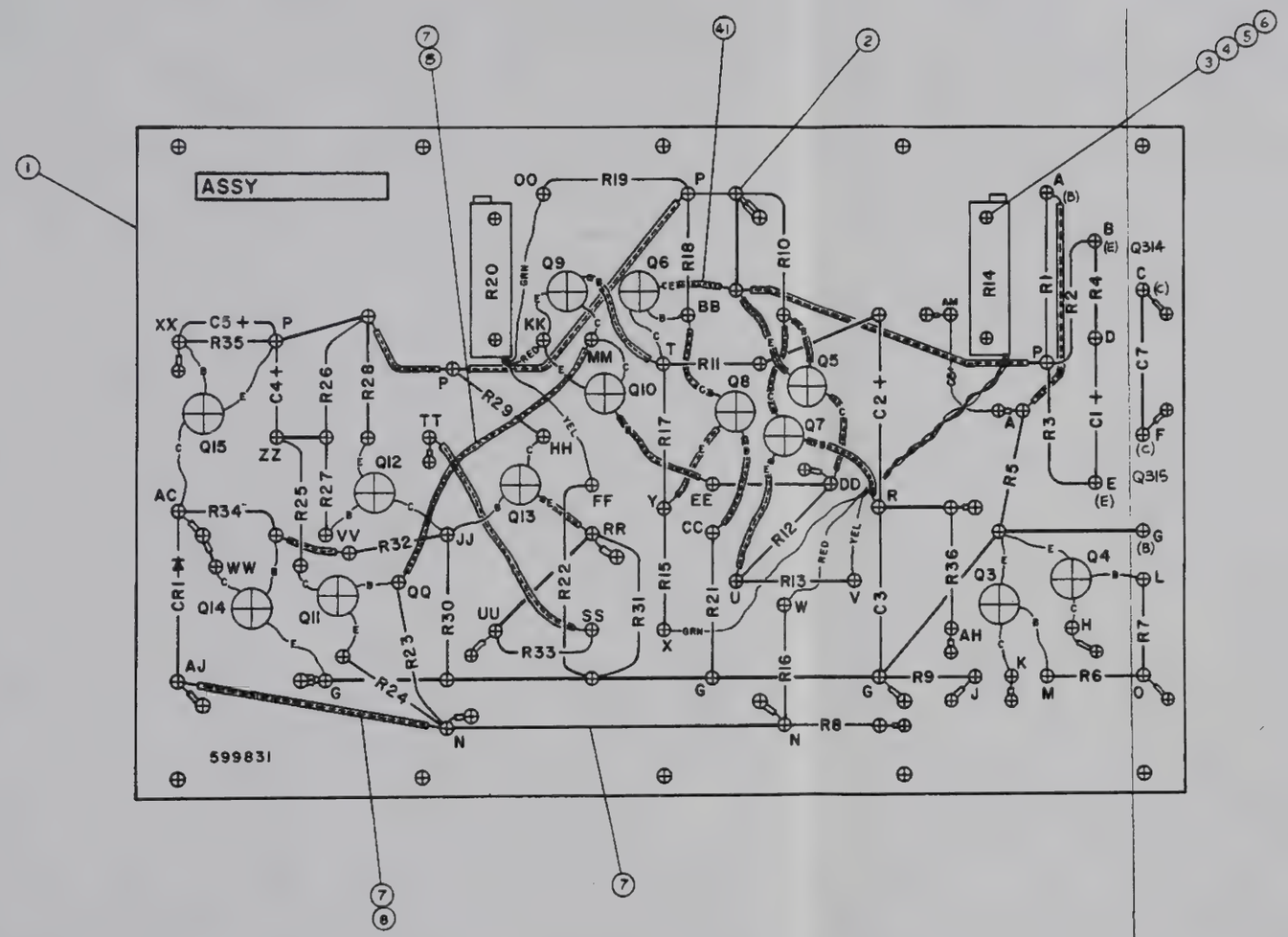

NOTES:

1. IDENTIFY ASSY AS TRACOR STK. NO. 599799 AND REVISION LETTER OF ASSOCIATED PL IN LOCATION SHOWN.
2. FOR A COMPLETE LIST OF PARTS AND MATERIALS SEE PL 599799.

(1) Phase Channel P.C. Board, Assembly Drawing 599829 Rev A

(2) Carrier Channel Terminal Assembly P.C. Board, Assembly Drawing 599799 Rev A

599848B 8-27/8-28

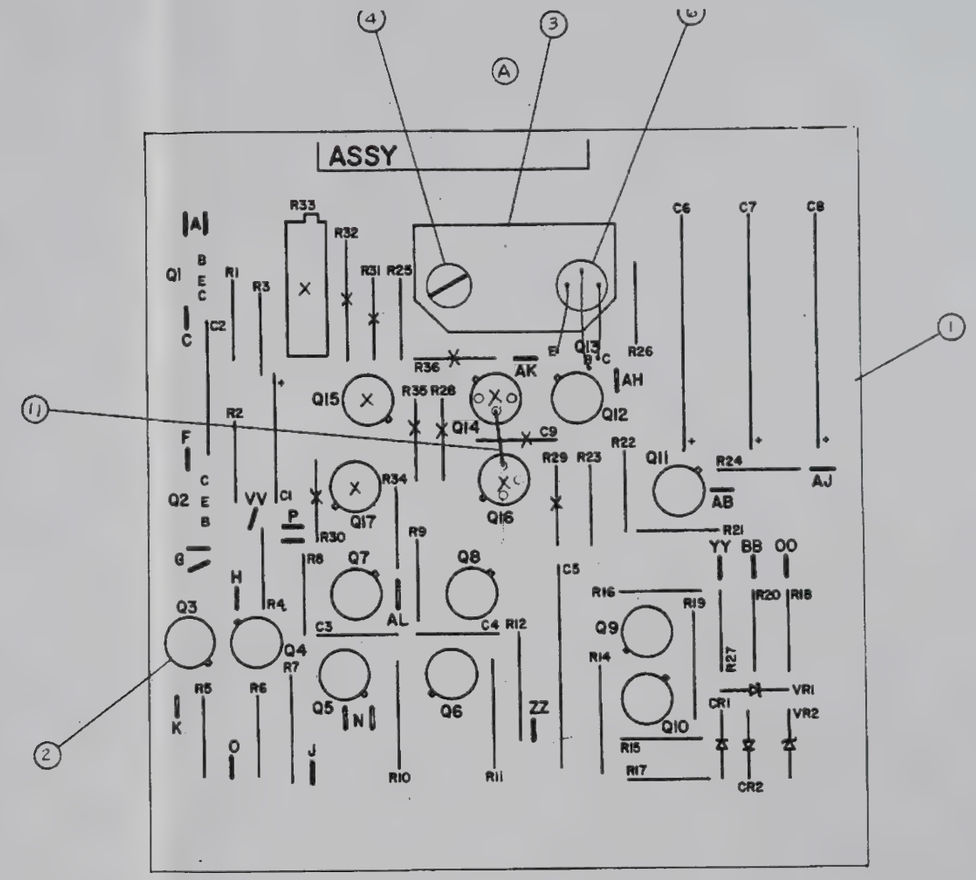

5. FOR A COMPLETE LIST OF PARTS AND MATERIALS SEE PL 509829.
4. Q14, Q15, Q16 AND Q17 ARE NOT USED. (MARKED X)
3. R25, R28, R30, R31, R32, R33, R35 AND R36 ARE NOT USED. (MARKED X)
2. C9 IS NOT USED ON THIS ASSY. (MARKED X)
1. IDENTIFY ASSY AS TRACOR STK NO 509829 AND REVISION LETTER OF ASSOCIATED PL IN LOCATION SHOWN.

NOTES

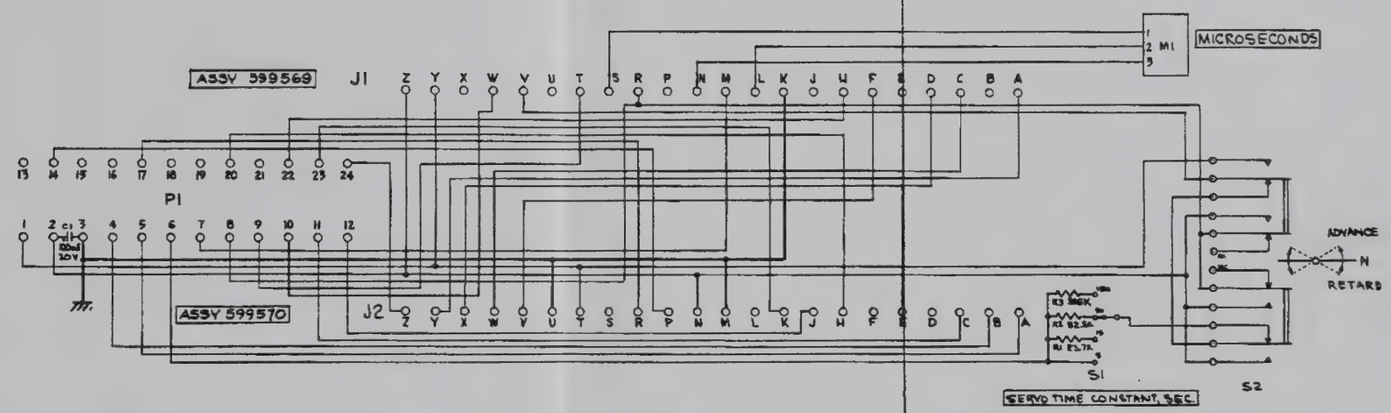

1 Phase Servo Module Model
599-402,
Schematic Diagram 599395 Rev E

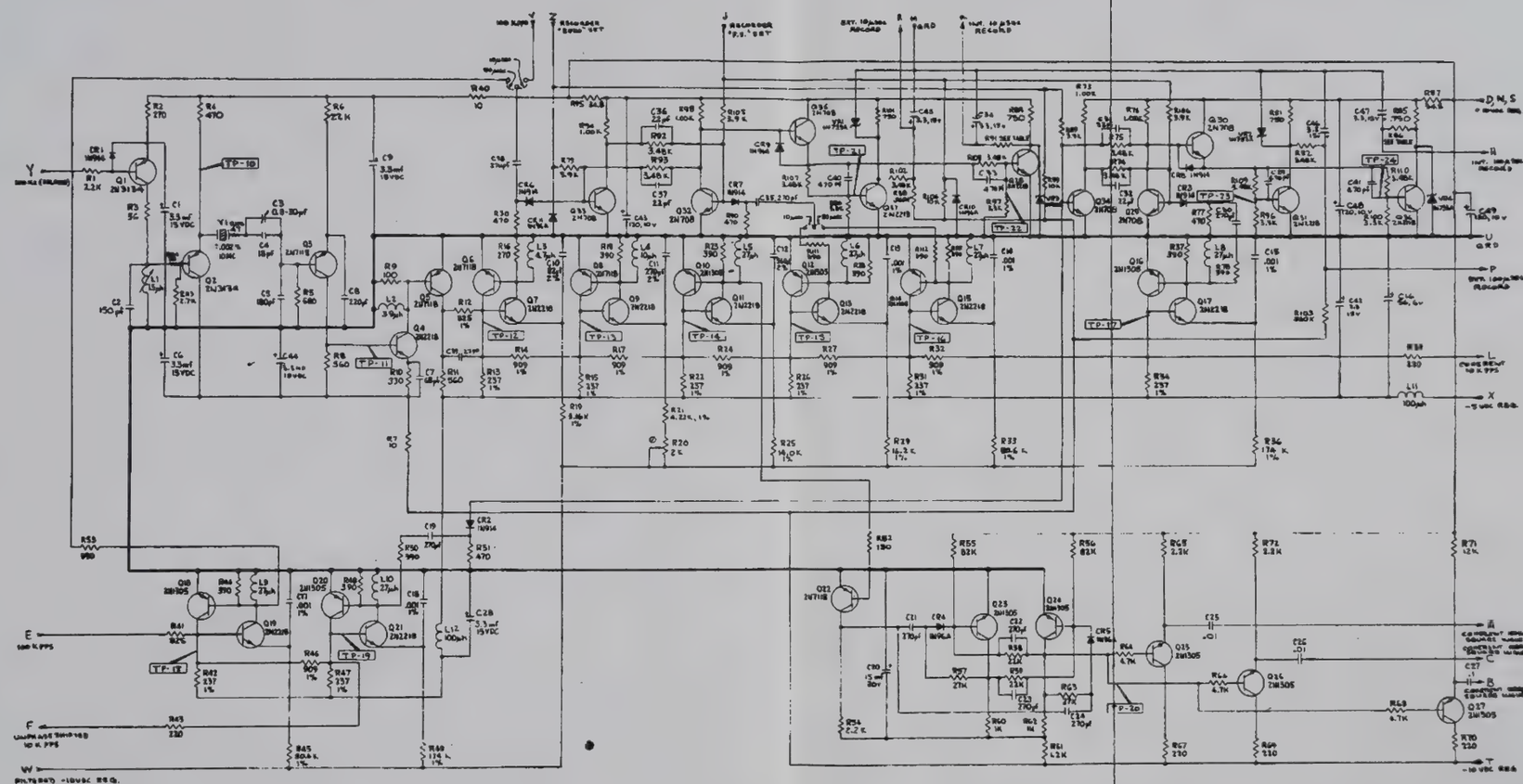

TABLE OF NEXT ASSY DASH NO.		
ASSY NO.	R86	R91
599570-0001	34.8K	34.8K
599570-0002	3.48K	3.48K

1. Phase Shifters P.C. Board, Assembly Drawing 599570 Rev K
2. Phase Shifters/Phase Comparator, Schematic Diagram 599396 Rev J

599848B 8-31/8-32

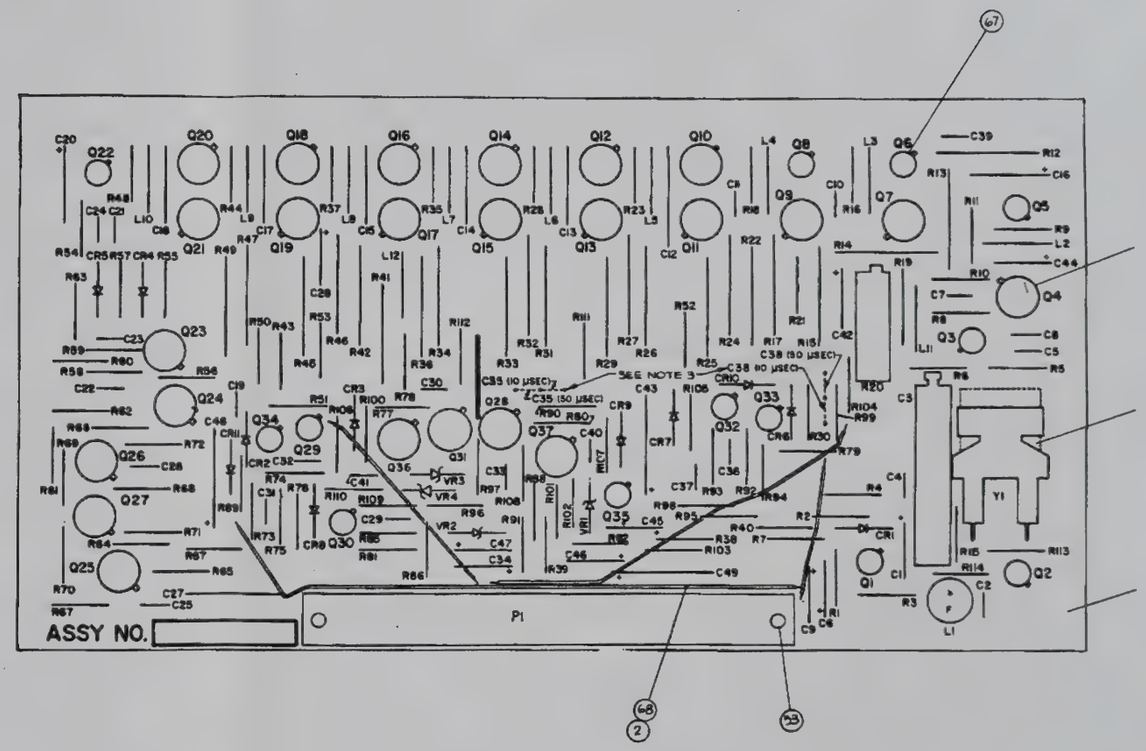

4. * ADD DASH NO. TO DWG NO. FOR COMPLETE TRACOR STK NO.
3. MOUNT C35 AND C38 IN THE "(10µSEC) LOCATION.
2. IDENTIFY ASSY AS TRACOR STK NO. 599570 * AND REVISION LETTER OF ASSOCIATED PL IN LOCATION SHOWN.
1. SEE SEPARATE PL FOR COMPLETE LIST OF MATERIALS.
NOTES:

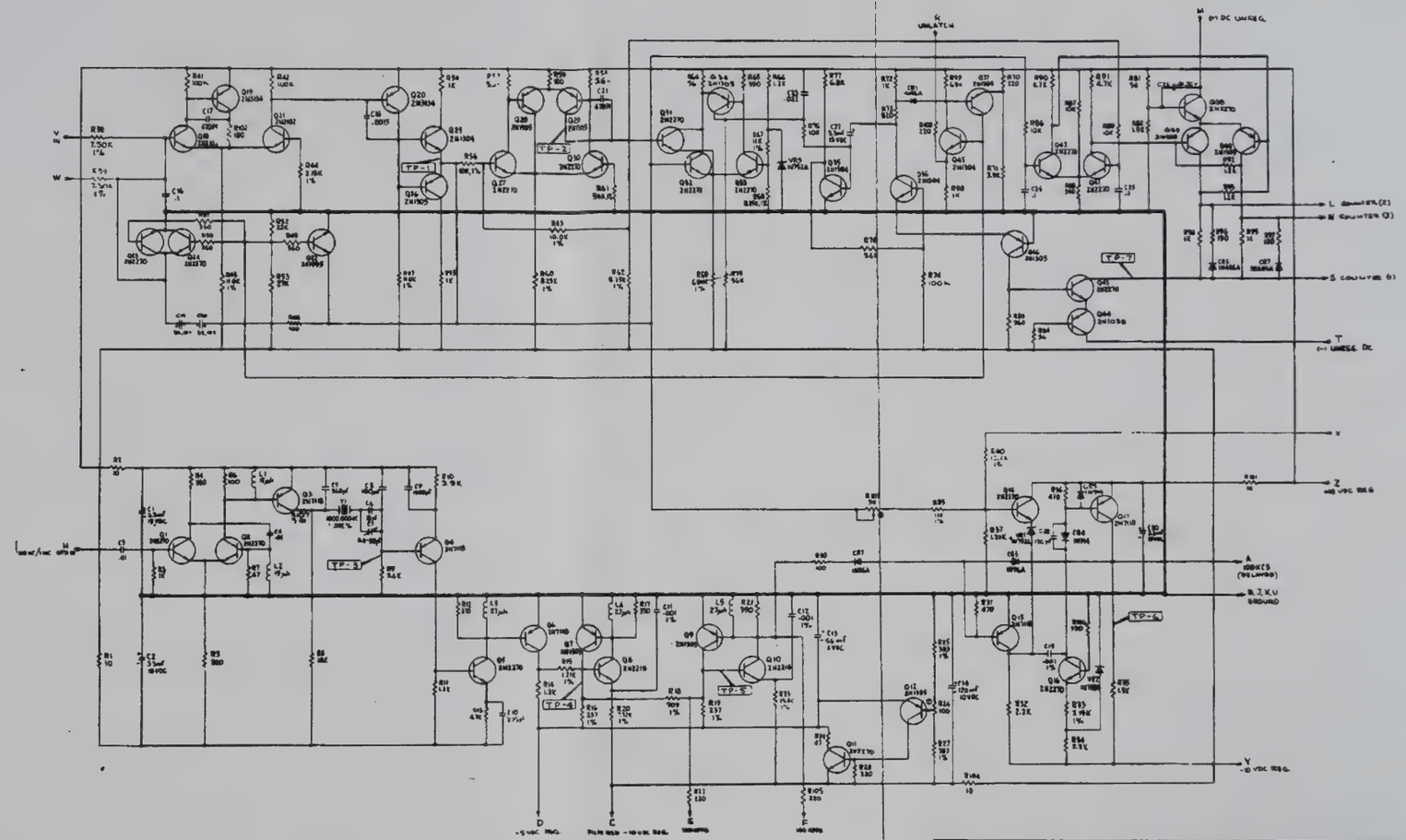

(1) Local Osc, Limiter/Filter
P.C. Board,
Assembly Drawing 599569 Rev F

(2) Local Osc, Limiter/Filter,
Integrator,
Schematic Diagram 599392 Rev F

599848B 8-33/8-34

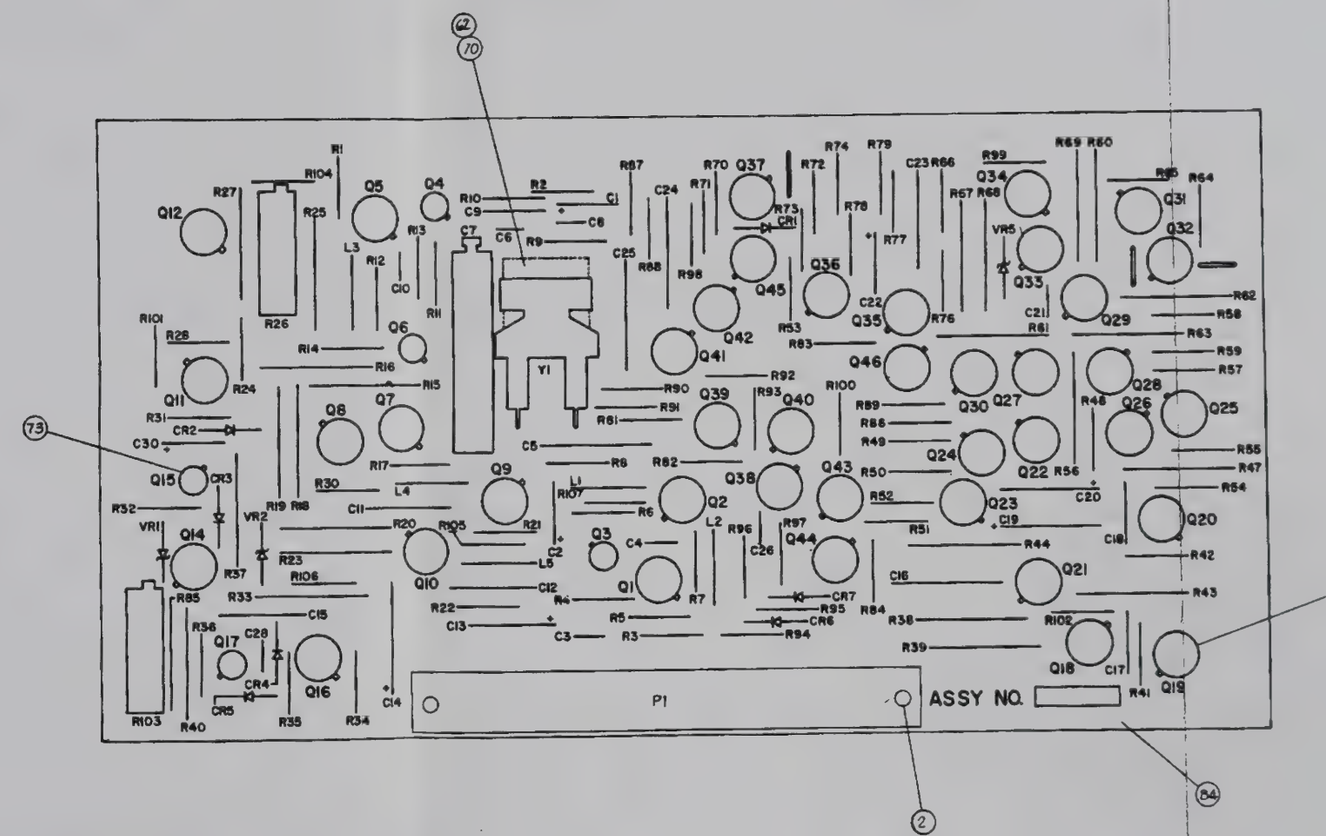

2. IDENTIFY ASSY AS TRACOR STK. NO. 599569 AND REVISION LETTER OF ASSOCIATED PL IN LOCATION SHOWN.
1. SEE SEPARATE PL FOR COMPLETE LIST OF MATERIALS.
NOTES:

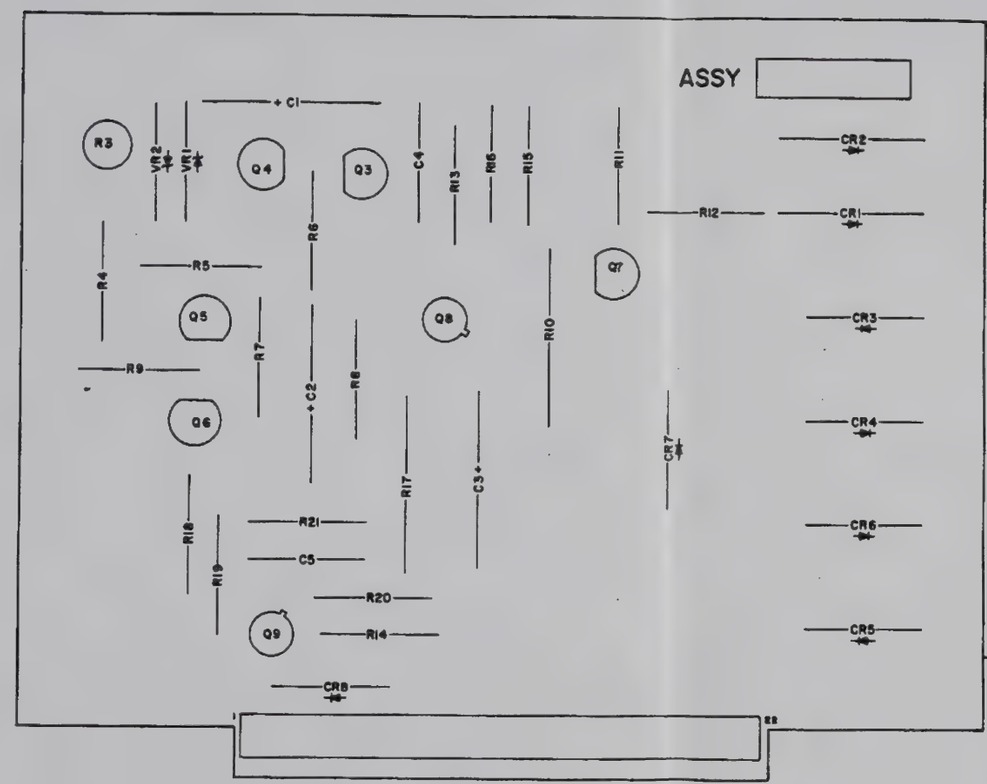

NOTE:
1. TRANSISTOR MOUNTING PADS, TRACOR STK NO. 3657-0013 AND TRACOR STK NO. 82 ARE TO BE USED ON Q8 AND Q9 RESPECTIVELY.
2. FOR A COMPLETE LIST OF PARTS AND MATERIALS SEE PL599721.
3. PAINT STAMP ASSY NO. 599721 AND LATEST REVISION LETTER IN AREA INDICATED.

(1) Power Supply Model 599-502, Assembly Drawing 599723 Rev C

(2) Power Supply Module P.C. Board, Assembly Drawing 599721 Rev B

599848B 8-35/8-36

(2)

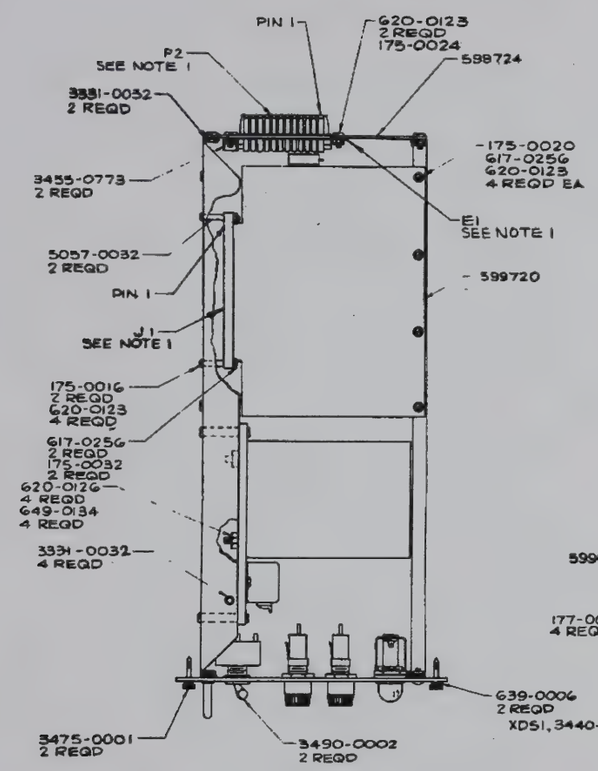

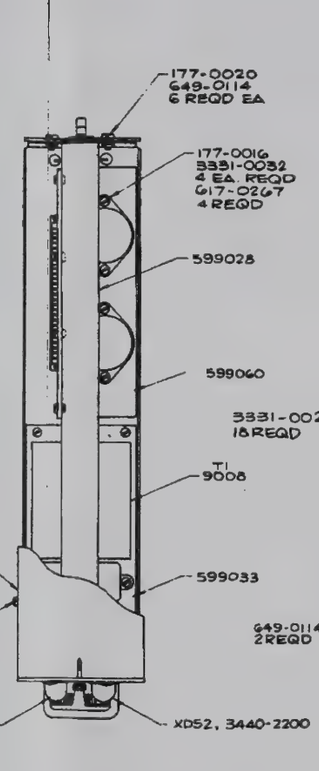

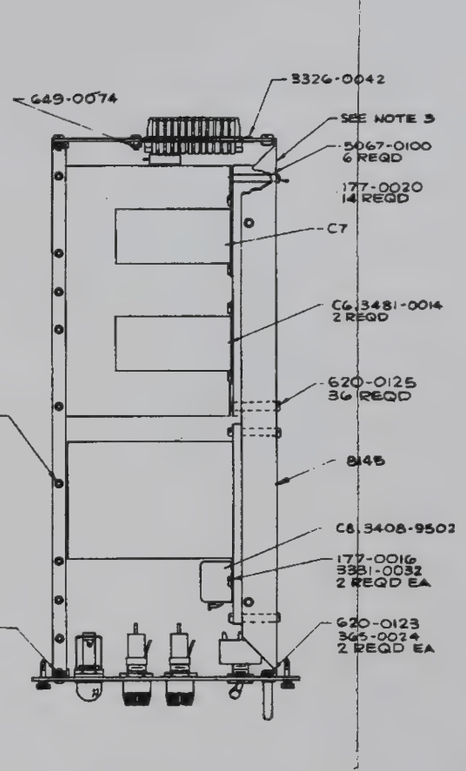

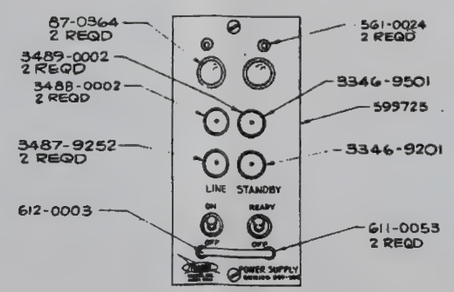

NOTES:

1. P2, J1 & E1 ARE INCLUDED IN WIRING HARNESS ASSY 599722.
2. SPEC TEST PROCEDURE IS TRACOR PART NO. 599727 AND SPEC TEST DATA IS TRACOR PART NO. 599728.
3. ADD IDENTIFICATION PLATE IN AREA INDICATED, TRACOR PART NO. 6152.
4. SEE PL 599723 FOR A COMPLETE LIST OF PARTS AND MATERIALS.

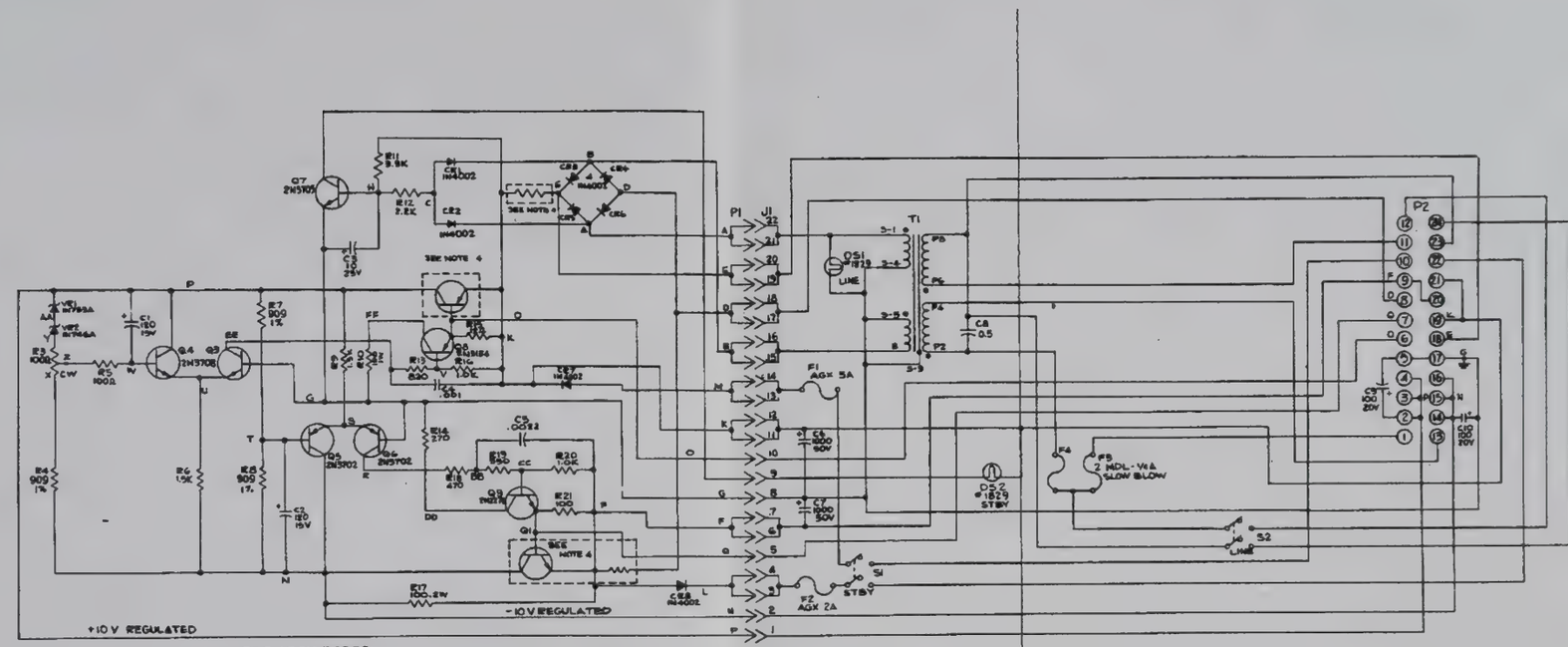

P2

1. A.C. LINE - FUSED. ("HI" SIDE)
2. (+) 10VDC REGULATED
3. (+) 10VDC REGULATED
4. (+) 10VDC REGULATED
5. GROUND
6. CONTROL: (+) SUPPLY REGULATOR
7. CONTROL: (-) SUPPLY REGULATOR
8. (-) 18V FULL WAVE RECTIFIED
9. (-) 15VDC UNREGULATED
10. (+) 12VDC STANDBY POWER IN
11. 115 VAC INTERNAL ("HI" SIDE)
12. 115/230 VAC LINE. (115VAC "HI" SIDE)
13. 115/230 VAC SELECTOR
14. (-) 10 VDC REGULATED
15. (-) 10 VDC REGULATED
16. (-) 10 VDC REGULATED
17. GROUND
18. (+) 18V FULL WAVE RECTIFIED
19. (+) 15VDC UNREGULATED
20. (-) 15VDC UNREGULATED
21. (+) 15VDC UNREGULATED
22. (-) 12VDC STANDBY POWER
23. 115 VAC INTERNAL ("LO" SIDE)
24. 115/230 VAC LINE. (115 VAC "LO" SIDE)

NOTES:

1. ALL RESISTOR VALUES IN OHMS AND ARE 1/2W, 10%, UNLESS OTHERWISE NOTED.
2. ALL CAPACITOR VALUES IN MICROFARADS.
3. Q6 IS MOUNTED IN HEATSINK.
4. COMPONENTS ENCLOSED WITH DASHED LINES ARE LOCATED ON REAR PANEL OF RECEIVER. REFERENCE DESIGNATIONS, TYPES, AND VALUES FOR THESE MAY DIFFER FOR DIFFERENT MODELS OF THE "599" SERIES OF RECEIVERS. FOR CORRECT REFERENCE DESIGNATIONS, TYPES, AND VALUES, REFER TO THE APPLICABLE CONNECTOR PANEL ASSY SCHEM. DIAG.
5. THE LAST USED REFERENCE DESIGNATORS ARE R21, C10, Q9, CR8, VR2, P1, J2, F4, DS2, AND S2.

(1) Power Supply Model 599-502, Schematic Diagram 599726 Rev A

599848B 8-27/8-28

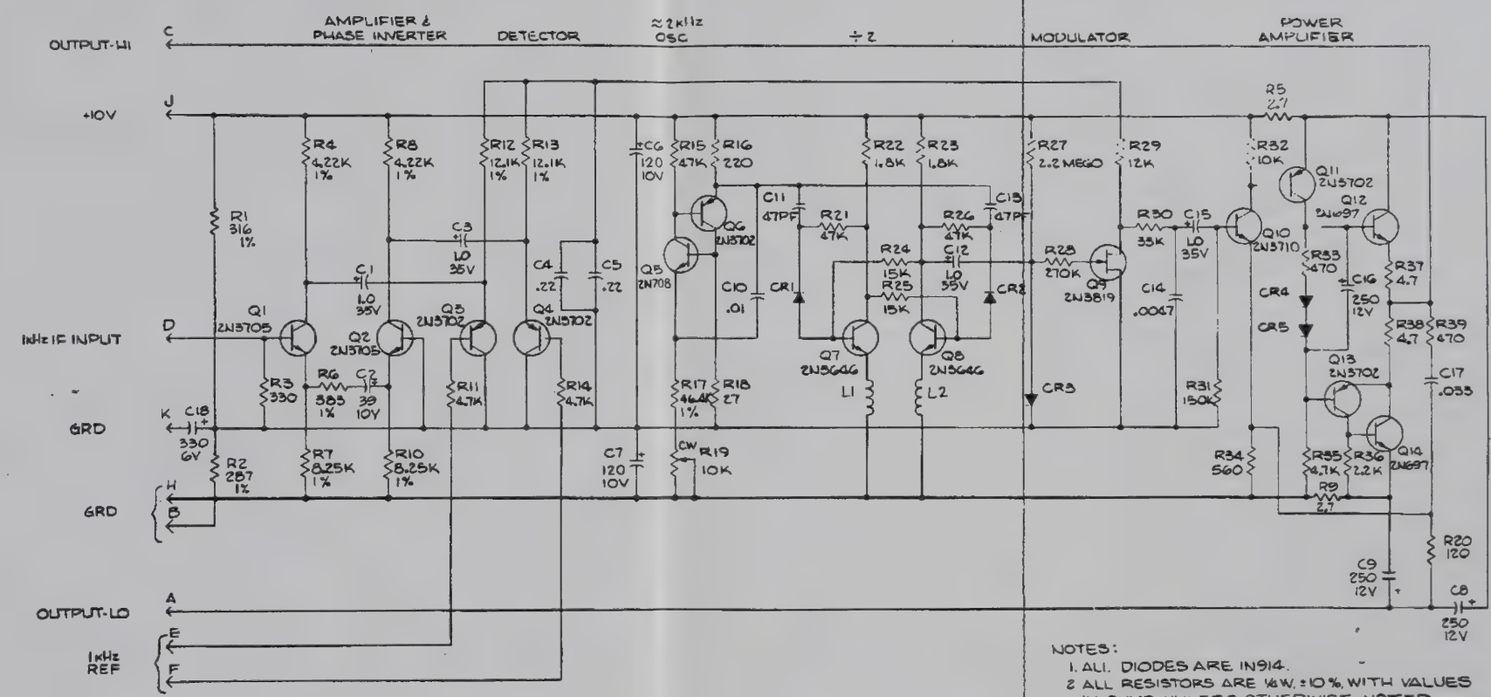

NOTES:
1. ALL DIODES ARE 1N914.
2. ALL RESISTORS ARE ½W, ±10%, WITH VALUES IN OHMS UNLESS OTHERWISE NOTED.
3. ALL CAPACITANCES ARE ±10% WITH VALUES IN MICROFARADS UNLESS OTHERWISE NOTED.
4. LAST USED REFERENCE DESIGNATORS: R39; Q14; C18; CR5; P1, L2.

(1) Audio Amplifier P.C. Board, Assembly Drawing 599800 Rev A

(2) Audio Amplifier, Schematic Diagram 599780 Rev A

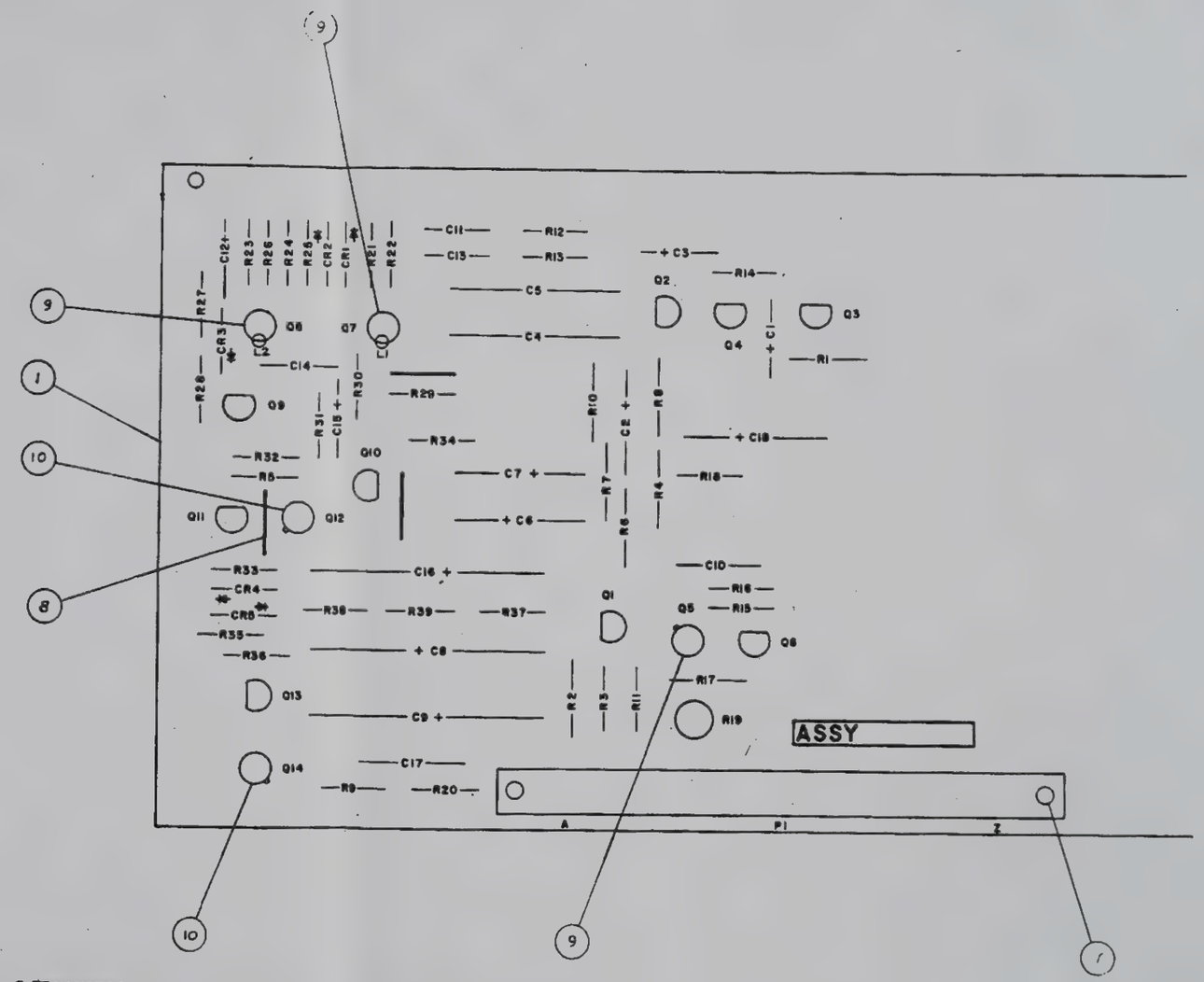

3 TRANSISTOR INSULATORS USED ONLY ON Q5, Q7, Q8, Q12 AND Q14
2. FOR A COMPLETE LIST OF PARTS AND MATERIALS SEE PL 599800
1. IDENTIFY ASSY AS TRACOR STK NO. 599800 AND
REVISION LETTER OF ASSOCIATED PL IN LOCATION SHOWN
NOTE:

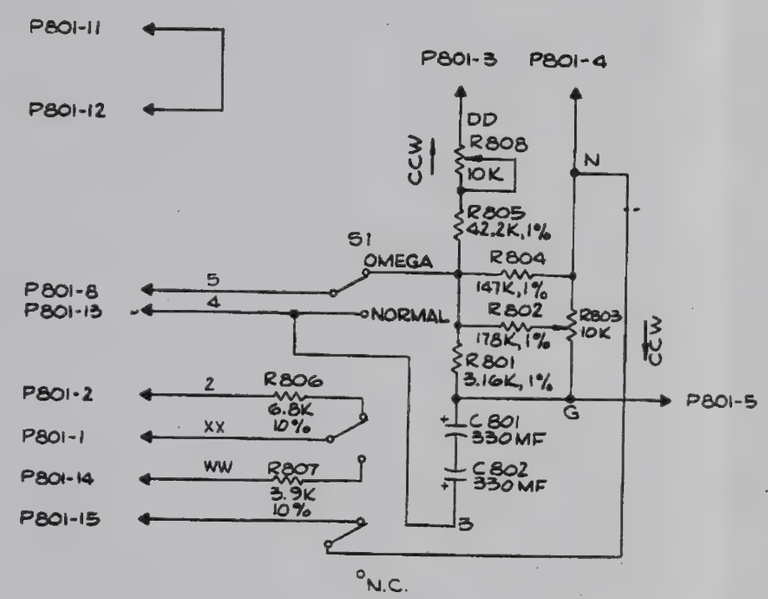

NOTES:

1. 10% RESISTORS ARE $\frac{1}{4}$ W.
2. 1% RESISTORS ARE $\frac{1}{8}$ W.
3. P801 PLUGS INTO J 302 (REFERENCE DIAGRAM SCHEMATIC 599393 FOR 599 G OR H REFERENCE DIAGRAM SCHEMATIC 599771 FOR 599J)

(2)

(1) AGC Clamping P.C. Board, Assembly Drawing 599790 Rev -

(2) AGC Clamping Board, Schematic Diagram 599798 Rev A

599848B

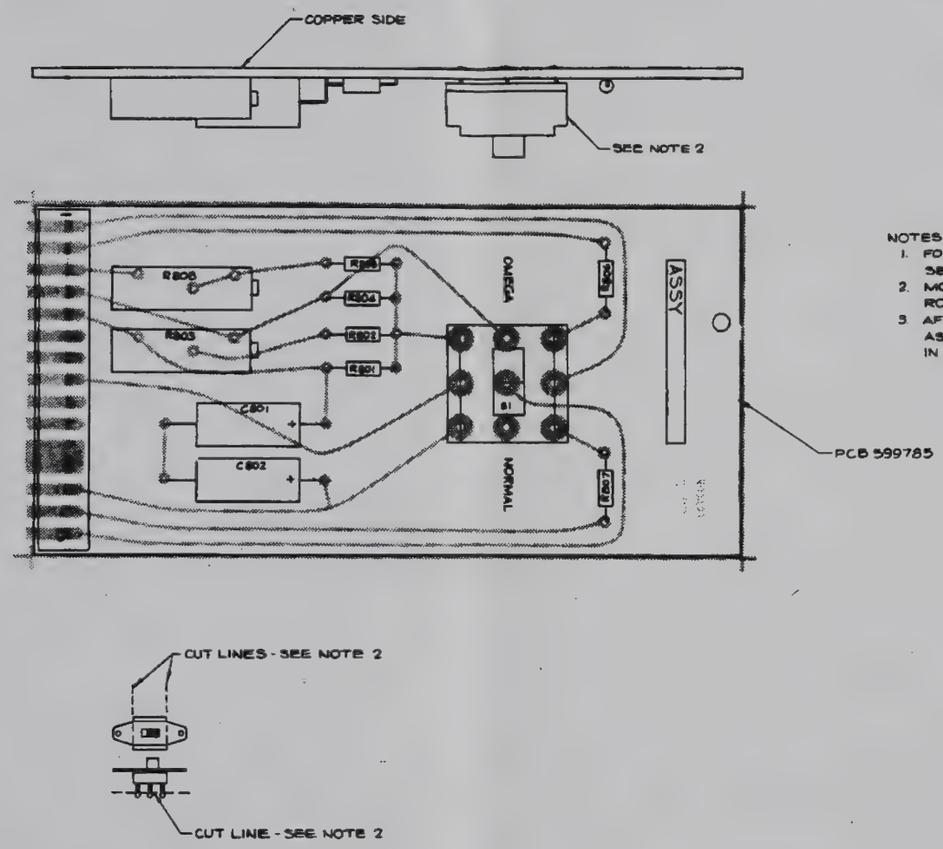

NOTES:

1. FOR A COMPLETE LIST OF PARTS AND MATERIA SEE LD 599790.
2. MODIFY SWITCH AS INDICATED. SMOOTH A ROUGH EDGES BEFORE ASSY.
3. AFTER COMPLETION OF ASSY, PAINT STAMP ASSY NO. 599790 AND LATEST REVISION LI IN BLOCK PROVIDED.

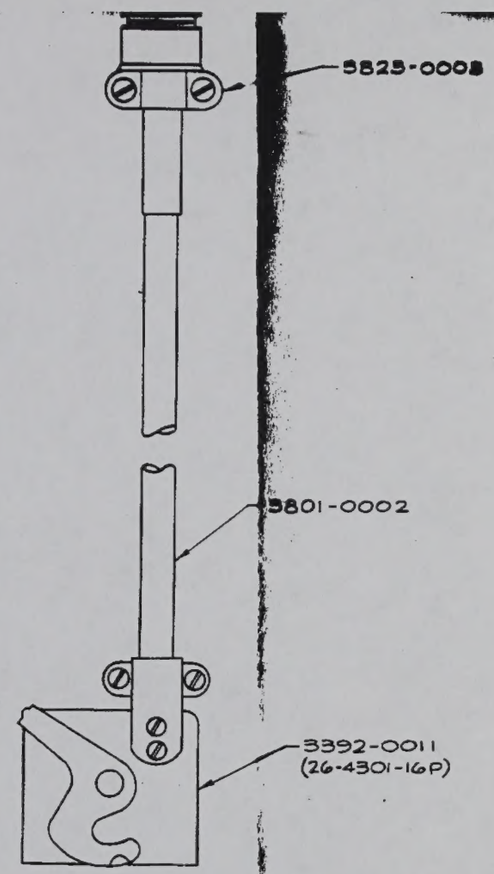

FROM	TO	LENGTH (IN)	WIRE SIZE	COLOR CODE	REMARKS
PIN D	PIN 16	6FT		SHIELD	SEE NOTE 1
PIN B	PIN 10	6FT	20		SEE NOTE 1
PIN F	PIN 14	6FT	20		SEE NOTE 1
PIN C	PIN 7	6FT	20		SEE NOTE 1
PIN A	PIN 8	6FT	20		SEE NOTE 1
PIN E		6FT	20		NO CONNECTION
PIN 7	PIN 2	1.5IN	20	RED	SEE NOTE 2

NOTES:
1. ALL ALPHABETICALLY DESIGNATED PINS WILL BE LOCATED ON MS-3106A-14S-6S. NUMERICALLY DESIGNATED PINS WILL BE LOCATED ON AMPH CONNECTOR 26-4301-16P.
2. THIS WIRE IS A JUMPER INSIDE 26-4301-16P AND IS NOT A PART OF CABLE, 3801-0002.

(1) OMEGA Cable Assembly
Drawing 6788 Rev -

599848B C-13/C-14

(1)